MORRIS

OPERATOR'S MANUAL

CX 8105
Air Drill
Ground Drive

N62398-01

Table of Contents

Section 1:

Safety....1-1
Signal Words....1-2
General Operation....1-3
Tractor Operation....1-3
Chemicals....1-4
Transporting....1-5
Hydraulics....1-5
Maintenance....1-6
Storage....1-6
Safety Signs....1-7
Front Side....1-10
Rear Side....1-10
Left Side....1-11
Right Side....1-11
Transmissions....1-12
Tank Lids....1-12
Meter Bodies....1-12
Main Frame....1-13
Rear Axle Bracket....1-13
Lighting and Marking....1-14

Section 2:

Specifications....2-1
Transport Dimensions....2-3

Section 3:

Checklist....3-1
Manuals....3-2
Parts Manual....3-2
Assembly Manual....3-2
Checklist....3-3

Section 4:

Introduction....4-1
Introduction....4-2

Section 5:

Operation....5-1
Application....5-3
Tractor....5-3
Hitching....5-4
Hitching to Tractor....5-4
Unhitching from Tractor....5-6
Transport....5-7
Speed....5-7
Lights....5-7
Transport to Field Position....5-8
Transport to Field Position - Continued....5-9
Meter Drive Wheel Engagement....5-9
Field to Transport Position....5-10
Field to Transport Position - Continued....5-11
Meter Wheel Disengagement....5-11
Metering System....5-12
Secondary Hose Installation....5-13
Seed Plate Sizes....5-14
Seed Plate Installation....5-15

Table of Contents

Bin Level Adjustment 5-16
Filling Tank 5-16
Unloading Tanks 5-18
Rate Charts 5-19
  Spacing Sprocket 5-19
  Rate Chart Use 5-20
  Extra Low Rates 5-21
  Extra High Rates 5-21
  Fertilizer Rate Chart 5-22
  Seed Rate Chart 5-23
  Slow Speed Seed Rate Chart 5-24
Rate Calibration 5-25
Seeding Fine Seeds (Canola, Mustard, etc.) 5-27
Applying Inoculant 5-27
Hydraulic Fan Drive 5-28
Fan Speed Recommendations 5-29
Double Shoot Settings 5-30
  Plenum Damper Settings 5-30
  Collector Valve Settings 5-31
  Flapper Valve Run Test 5-31
Opener Operation 5-32
  Accumulator System Operation and Pre-Charge Information 5-32
  Setting Maximum System Pressure (Trip Out Force) 5-33
  Relieve System Pressure 5-34
  Normal Operation 5-34
  Pressure Adjustment (On the go) 5-35
Depth Adjustment 5-36
Work Switch 5-38
Quick Tips 5-39
  Shank Trip Force 5-39
  Packing Force 5-39
  Hydraulic System 5-39
  Lifting and Lowering the Openers 5-39
  Setting the Seed Depth 5-40
  Seeding Conditions 5-40
  Straw Management 5-40
  Air Drill Frame 5-41
  Trouble Shooting Guide 5-41
Wing Lift Hydraulics 5-42
Opener Hydraulics 5-43
General Guidelines 5-48
  Turning 5-49
  Seed Rate Settings 5-49
  Fertilizer Application 5-49
  Fan Setting 5-49
  Product Application 5-49
  Adjustments and Operational Checks 5-50
  Checking Seed Flow 5-50
  Moisture Alert 5-50
  Air Leaks 5-50
  Tank Low in Product 5-50
  Monitor 5-51
General Field Operation 5-51
  Clutch Switches 5-51

Table of Contents

Section 6:

Monitor 6-1
Introduction 6-3
Identifying Monitor Switches 6-4
Identifying Monitor Displays 6-4
Operating Screen 6-5
Display Section 6-5
Active Alarm Window 6-5
Bin Level Icon Window 6-5
Soft Key Label Windows 6-5
Navigating the Operating Screen 6-6
Enlarged Operating Screen 6-7
Installing Monitor 6-8
Startup 6-9
Power On 6-9
Power Off 6-9
Force Language 6-9
Startup Menu Screen 6-10
Sensor Installation 6-11
Installation Precautions 6-11
Installation Procedure 6-12
Monitor Settings 6-14
Navigating Settings Screens 6-14
The Menu Title 6-14
The Body of the Menu 6-14
The Menu Soft Key Descriptions 6-15
Changing Monitor Settings 6-16
Entering the “Settings Menu” 6-16
Settings Menu Chart - Standard Drive 6-17
Wheel Pulses Per 400 Feet (PP400) Standard Drive 6-18
Speed Calibration 6-18
Speed Calibration - Continued 6-19
Alarms 6-20
Introduction 6-20
Nuisance Shaft Alarm 6-20
“In Motion” Notification 6-21
Low Fan Alarms 6-21
Blockage Sensing 6-22
Module Installation 6-22
Runs per Module Setup 6-22
Individual Runs Setup 6-22
Blockage Module Test 6-23
Blockage Calibration 6-24
Optical Blockage Run Bad Alarms 6-25
Blockage Alarms 6-25
Area Display 6-26
Resetting Area 6-26
Sensor Replacement 6-27
Sensor Gap Settings 6-28
Reed Switch Sensors 6-28
Variable Reluctance Sensors 6-28
Trouble Shooting Guide 6-29
Checking Harness 6-29
Checking Sensors 6-29
Checking Blockage System 6-29

Table of Contents

Section 7:

Maintenance 7-1
General 7-3
Safety 7-3
Tighten Bolts 7-4
Tires 7-4
Daily Maintenance 7-5
Lubrication 7-6
Air Delivery System 7-8
General 7-8
Tank Lid Adjustment 7-9
Air Leak Check 7-11
Fan 7-12
Fan Screen 7-12
Fan Impeller 7-12
Storage 7-12
Impeller Clearance 7-13
Hoses 7-13
Hydraulic Orbit Motor 7-14
Repair/Replacement 7-14
Tie Rod - Tow Between 7-15
Metering 7-16
Metering Wheel Replacement 7-16
Seed Plate Adjustment 7-20
Blank Off Installation 7-21
Opener Maintenance 7-22
Bushing Replacement 7-22
Cylinder Replacement 7-22
Shank Replacement 7-23
Opener Body Assembly 7-24
Opener Assembly 7-26
Bleeding Hydraulic System 7-36
Hydraulic System Trouble Shooting 7-37
Hydraulics 7-38
Wheel Bearings 7-39
Implement Hub 7-39
Contour Opener Hub 7-40
Wheel Bearing Adjustment 7-41
Meter Drive Hub 7-41
Air Brake Maintenance 7-42
Every Three Months or 25,000 Miles 7-42
Every Six Months or 50,000 Miles 7-42
Greasing the Slack Adjuster 7-42
Slack Adjuster Function Test 7-44
Troubleshooting 7-44
FF2 Full Function Valve Fitting General Installation Guidelines 7-45

Section 8:

Storage 8-1
Preparing for Storage 8-2
Metering Body Storage 8-3
Wing Lift Cylinder Shaft Protection 8-4
Removing From Storage 8-5
Monitor 8-5
Auger/Conveyor 8-5

Table of Contents

Section 9:

Troubleshooting....9-1
Air Delivery....9-3
Delivery hoses plugged....9-3
Hydraulic fan will not turn....9-3
Fan turning too slow....9-3
Material flowing thru system when unit is stationary and the fan running....9-3
Material not being divided in distribution head....9-3
Material not being metered out....9-4
Material not being accurately metered out of the metering body....9-5
Plugged seed boots....9-6
Monitor....9-7
Monitor lights up but does not seem to work....9-7
No fan display....9-7
No ground speed display....9-7
No meter speed display....9-7
No display, no back light....9-7
Bin indicates always empty....9-8
Bin indicates always full....9-8
Seed Unit....9-9
Machine not operating straight.....9-9
Lack of penetration.....9-9
Openers wearing unevenly....9-9
Wing lifting too slowly.....9-9
Wings not lowering.....9-9
One wing will lift, other will not.....9-9
Oil accumulation.....9-9
Accumulator system pressure drop excessive.....9-10
Openers won't lift or lower.....9-10
Openers can not be fully pressurized.....9-10
Shanks hang back and trip out during normal operation.....9-10
Seed rows covered in loose soil after seeding.....9-10
Packer wheels bounce and chatter excessively in field.....9-10
Openers drop quickly after transport lock valve is closed.....9-10
Opener pressure drops quickly during normal operation.....9-11
Excessive seed depth and soil throw.....9-11
Openers not fully lifting to transport position.....9-11

Table of Contents

Notes

Section 1: Safety

Section Contents

Signal Words 1-2
General Operation 1-3
Tractor Operation 1-3
Chemicals 1-4
Transporting 1-5
Hydraulics 1-5
Maintenance 1-6
Storage 1-6
Safety Signs 1-7
- Front Side 1-10
- Rear Side 1-10
- Left Side 1-11
- Right Side 1-11
- Transmissions 1-12
- Tank Lids 1-12
- Meter Bodies 1-12
- Main Frame 1-13
- Rear Axle Bracket 1-13

Lighting and Marking 1-14

SAFETY-ALERT SYMBOL

Watch for this symbol. It identifies potential hazards to health or personal safety. It means:

ATTENTION - BE ALERT.
Your Safety is involved.

Familiarize yourself with the location of all decals. Read them carefully to understand the safe operation of your machine.

Signal Words

The words **DANGER, WARNING** or **CAUTION** are used with the safety alert symbol. Learn to recognize the safety alerts, and follow the recommended precautions and safe practices.

Three words are used in conjunction with the safety-alert symbol:

DANGER — **Indicates an imminently hazardous situation that, if not avoided, will result in DEATH OR SERIOUS INJURY.**

WARNING — **Indicates a potentially hazardous situation that, if not avoided, could result in DEATH OR SERIOUS INJURY.**

CAUTION — **Indicates a potentially hazardous situation that, if not avoided, may result in MINOR OR MODERATE INJURY.**

Replace any **DANGER, WARNING, CAUTION** or instructional decal that is not readable or is missing. The location and part number of these decals is identified later in this section of the manual.

The words **Important** and **Note** are not related to personal safety but are used to give additional information and tips for operating or servicing this equipment.

IMPORTANT: Identifies special instructions or procedures which, if not strictly observed could result in damage to, or destruction of the machine, process or its surroundings.

NOTE: Indicates points of particular interest for more efficient and convenient repair or operation.

General Operation

- **DO NOT RIDE!!** Do not allow riders on the implement when in motion.
- Do not allow extra riders in the tractor unless an instructor seat and seat belt are available.
- **Check behind** when backing up.
- **Reduce speed** when working in hilly terrain.
- Never allow anyone within the immediate area when operating machinery.
- **Keep all shields in place**, replace them if removed for service work.
- Always lock auger attachment in raised position.
- Keep hands clear of tank opening when closing lid. Keep lid seal clean to ensure proper sealing.
- **Do Not enter tank unless another person is present and the tractor engine has been shut off.**
- Wear close fitting clothing and appropriate personal protective equipment for the job.

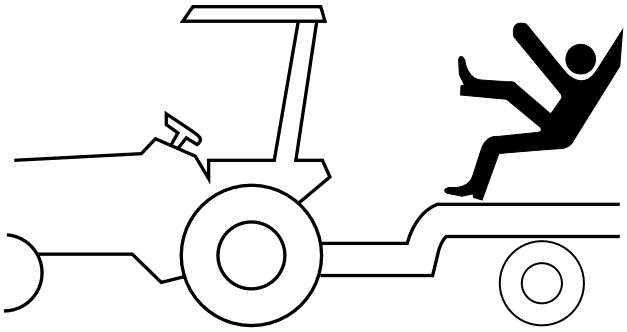

Tractor Operation

- Be aware of the correct tractor operating procedures, when working with implements.
- Review tractor operator's manual.
- Secure hitch pin with a retainer and lock drawbar in centre position.

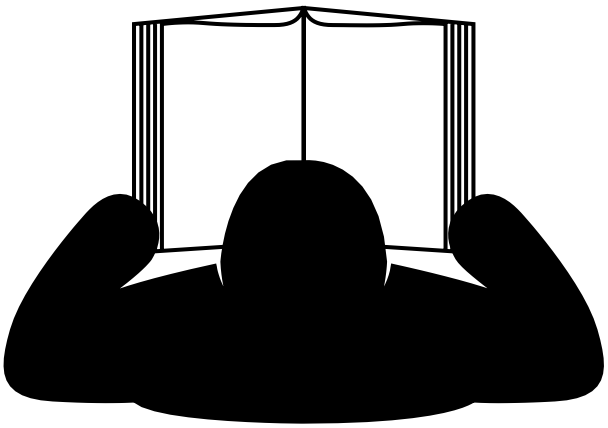

Chemicals

- **Use extreme care** when cleaning, filling or making adjustments.
- **Always read** granular chemical or treated seed manufacturer's warning labels carefully and follow them.
- Wear close fitting clothing and appropriate personal protective equipment for the job as specified by the chemical and/or seed manufacturer.
- **Always wear** safety goggles, breathing apparatus and gloves when handling granular chemical or treated seed.
- **Do not feed** any treated seed to livestock. Treated seed is poisonous and may cause harm to persons or livestock.
- **Wash exposed skin immediately** - do not leave chemicals on your skin.
- **Properly store** chemicals in original containers with labels intact per the manufacturer's instructions.
- Always follow the manufacturer's operating instructions and warning labels when operating an ammonia tank with the equipment.
- **Do Not enter tank unless another person is present and the tractor engine has been shut off.**

⚠ Danger

Failure to comply may result in serious injury or death.

Read Operator's Manual and decals on **Ammonia** tank before operating air cart. Become familiar with all warnings, instructions, and controls.

Always wear gloves and goggles when transferring or handling ammonia.

Always stay clear of hose and valve openings.

Always be sure pressure is relieved before disconnecting hoses or parts.

Always secure connecting parts and safety chains before towing ammonia trailer.

Always have ample water available in case of exposure to ammonia liquid or gases.

Transporting

- **Be aware** of the height, length and width of implement. Make turns carefully and be aware of obstacles and overhead electrical lines.
- Empty tanks before transporting. Do Not Exceed 20 mph (32 kph) with an empty air cart.
- Use an agricultural tractor that is large enough with sufficient braking capacity so that the weight of the loaded equipment towed does not exceed 1.5 times the weight of the tractor.
- Use flashing amber warning lights, turn signals and SMV emblems when on public roads.
- Do not transport in poor visibility.
- The slow moving vehicle (SMV) emblem and reflectors must be secured and be visible on the machine for transport.
- Avoid soft surfaces, the additional wing weight on the centre wheels could cause the machine to sink.
- Ensure safety chain is attached correctly to the towing vehicle and the hitch of the air cart.
- Check that wings are firmly seated in transport wing stops, and lock pins installed.
- Secure transport locks on depth control cylinders.
- Be familiar with, and adhere to, local laws.

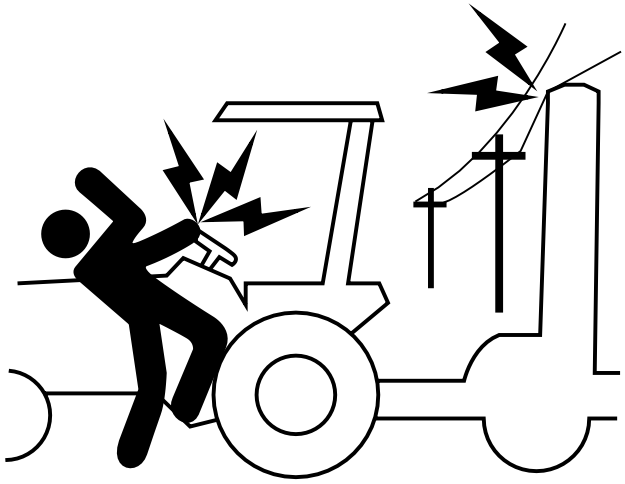

Hydraulics

- **Do not** search for high pressure hydraulic leaks without hand and face protection. A tiny, almost invisible leak can penetrate skin, thereby requiring immediate medical attention.
- Use cardboard or wood to detect hydraulic leaks - never your hands.
- Double check that all is clear before operating hydraulics.
- **Never** remove hydraulic hoses or ends with machine elevated. Relieve hydraulic pressure before disconnecting hydraulic hoses or ends.
- Maintain proper hydraulic fluid levels.
- Keep all connectors clean for positive connections.
- Ensure all fittings and hoses are in good condition.
- Do not stand under wings.

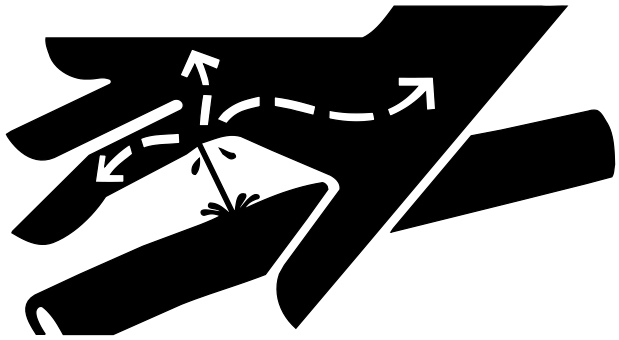

Maintenance

- **Shut tractor engine off** before making any adjustments or lubricating the machine.
- **Block** machine securely to prevent any movement during servicing.
- Wear close fitting clothing and appropriate personal protective equipment for the job.
- **Always wear** safety goggles, breathing apparatus and gloves when working on seeder filled with granular chemical or treated seed per the manufacture's instructions.
- Do not modify the machine.

Caution

Care should be taken when working near the air cart while the fan is running. Product blowing out of the system could cause personal injury.

Caution

Keep service area clean and dry. Wet or oily floors are slippery. Wet spots can be dangerous when working with electrical equipment.

Storage

- Store implement away from areas of main activity.
- Level implement and block up securely to relieve pressure on jack.
- Do not allow children to play on or around stored implement.
- Refer to Storage Section for more details.

Safety Signs

DANGER

CONFINED SPACE HAZARD

To Prevent Serious Injury or Death:

- **Do not enter tank.**
- **Be aware of and follow safety precautions**
- **Read and follow chemical manufacturer's safety instructions.**

N36262

DANGER

- **Hydraulic motor or engine and exhaust system becomes extremely hot from operation.**
- **Keep hands, feet and clothing away from moving parts.**
- **Keep all covers, shrouds and guards in place.**

N19023

DANGER

- **WINGS MAY FALL RAPIDLY CAUSING BODILY INJURY.**
- **ALWAYS STAY CLEAR OF FOLDING WINGS WHEN BEING RAISED, LOWERED, OR IN ELEVATED STATE.**
- **ALWAYS INSTALL ALL LOCKUP DEVICES PROVIDED WHEN WINGS ARE IN ELEVATED POSITION.**
- **ENSURE CYLINDER IS COMPLETELY FILLED WITH HYDRAULIC FLUID TO AVOID UNEXPECTED MOVEMENT.**

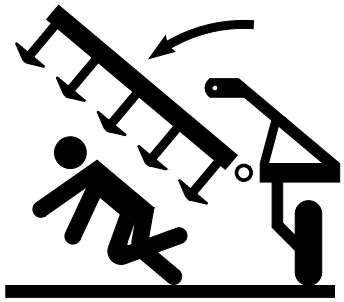

C13704

WARNING

Personal injury or property damage may result from loss of control.

- **Always use large enough tractor with sufficient braking capacity.**
  - **Weight of fully loaded implement should not be more than 1.5 times weight of tractor.**
- **Maximum recommended towing speed is 20 mph (32 km/h).**
- **Use flashing amber warning lights and SMV emblem when on public roads, except where prohibited by law.**
- **Refer to tractor and implement Operator's Manuals for weights and further information.**

N24301

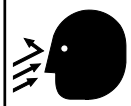

CAUTION

To avoid injury, do not open lids while fan is operating. Air gust may contain dust and particles.

N15094

Familiarize yourself with the location of all decals. Read them carefully to understand the safe operation of your machine.

Safety Signs - Continued

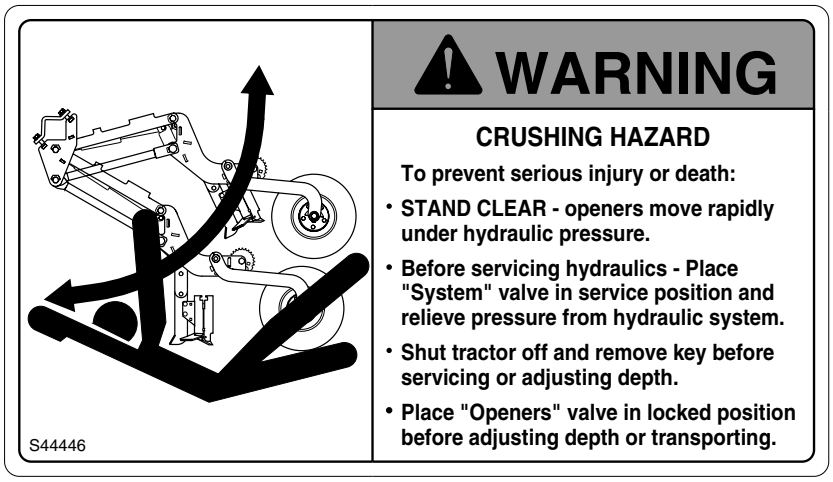

C31394 - Warning - Hitch

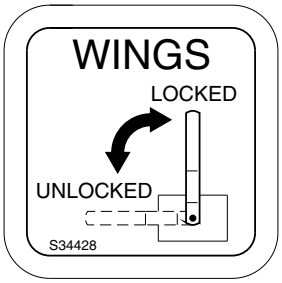

DECAL - S34428

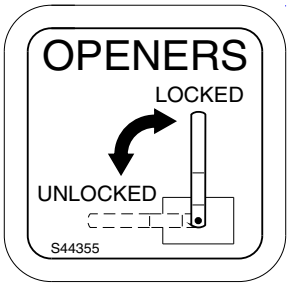

DECAL - S44355

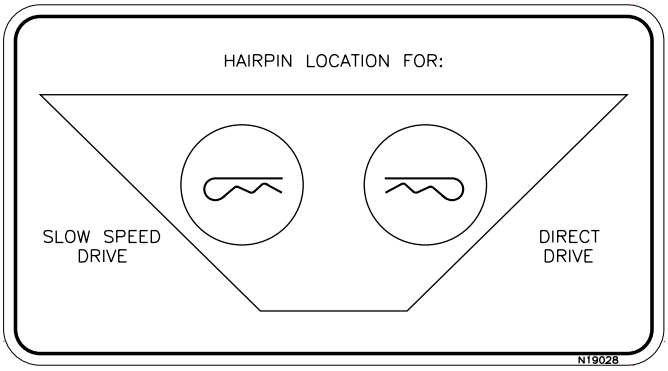

N19028 - Slow Speed

Familiarize yourself with the location of all decals. Read them carefully to understand the safe operation of your machine.

Safety Signs - Continued

IMPORTANT

BEFORE FILLING TANK

- Ensure each meter is set correctly as described in the Operator's Manual.
- Ensure Tank clean out door is fully closed.

BEFORE APPLYING PRODUCT

- Set rate according to the procedure and rate chart described in the Operator's Manual.
- Take a sample and adjust the rate, if necessary.

AIR LEAKS AFFECT METERING ACCURACY

- Ensure all seals are properly positioned and all lids are tightly closed.

N42356

IMPORTANT

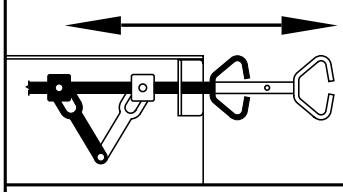

Cycle Collector Valve Daily to ensure free movement. Minimum of 5 cycles.

N36264

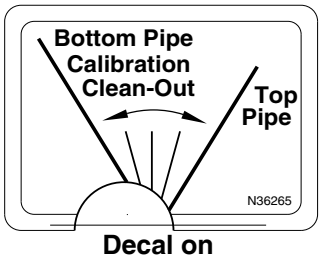

Decal on Collector

IMPORTANT

PREVENT CORROSION

Clean the Metering Body (Including Air Passages) and the Collector Body. A light coating of Silicone Lubricant or WD-40 or Penetrating Oil should be applied before storage.

N21604

Familiarize yourself with the location of all decals. Read them carefully to understand the safe operation of your machine.

Safety Signs - Continued

Front Side

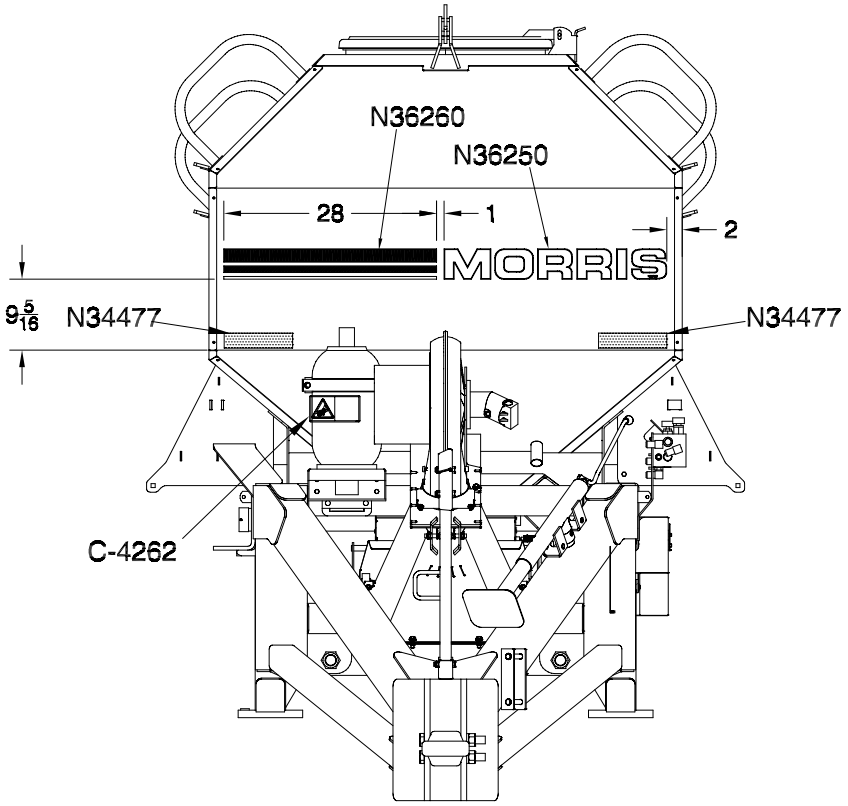

Rear Side

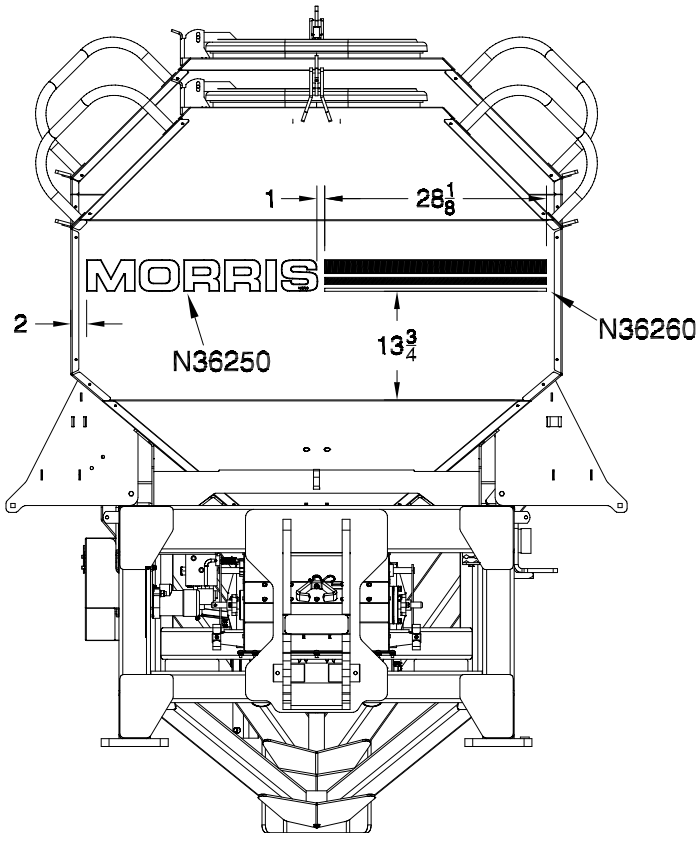

Safety Signs - Continued

Left Side

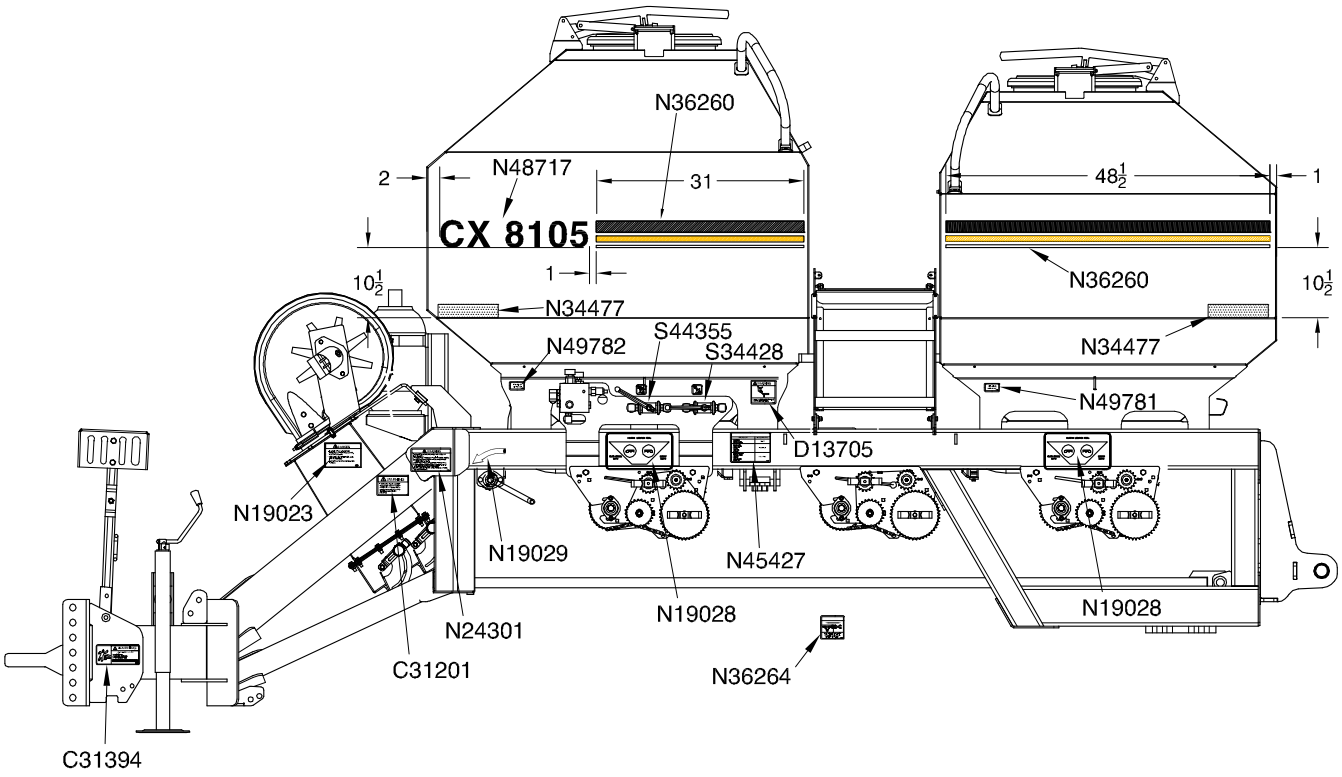

Right Side

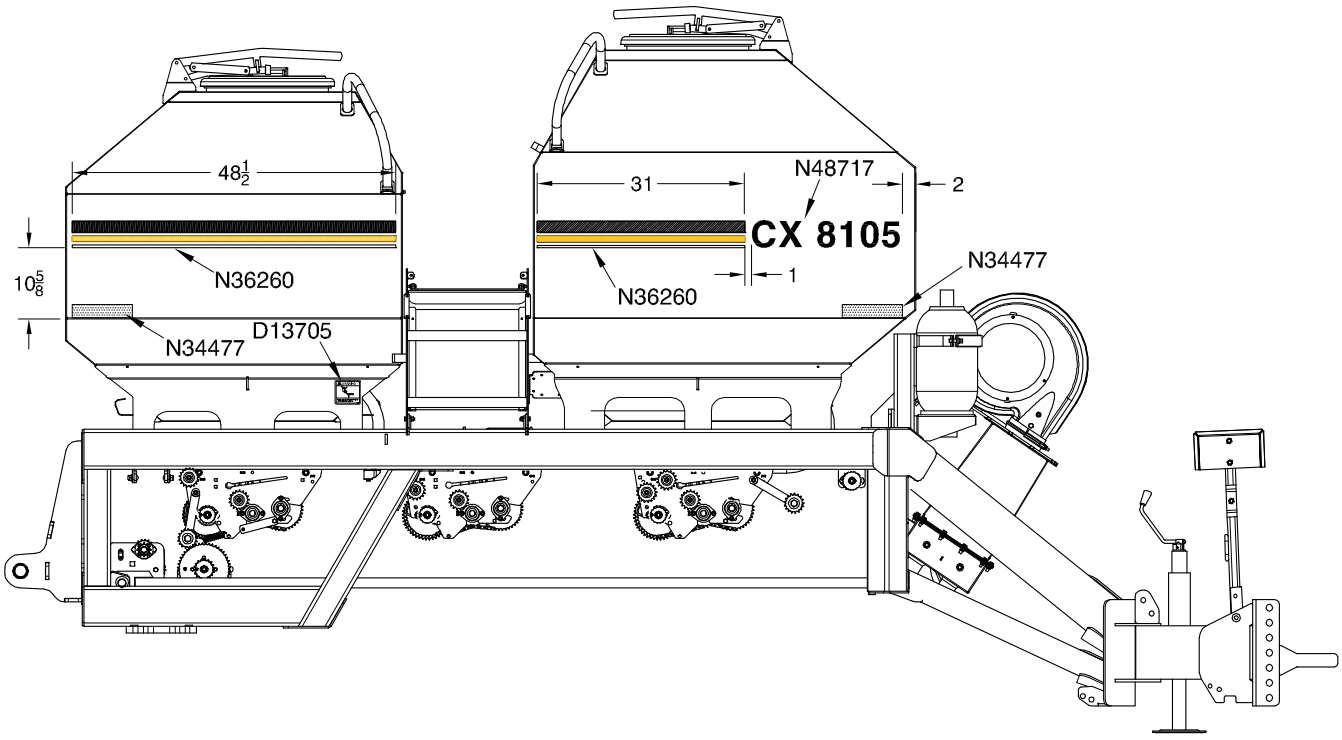

Safety Signs - Continued

Transmissions

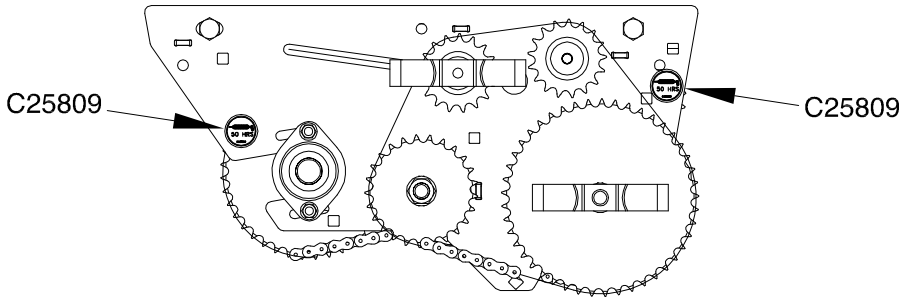

Tank Lids

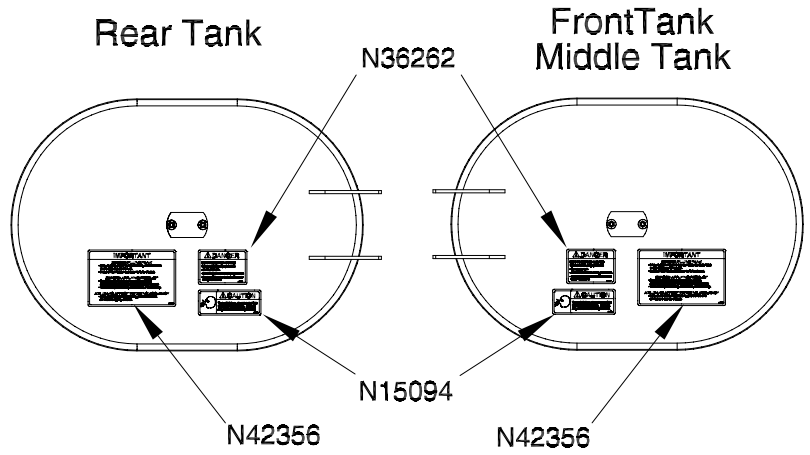

Meter Bodies

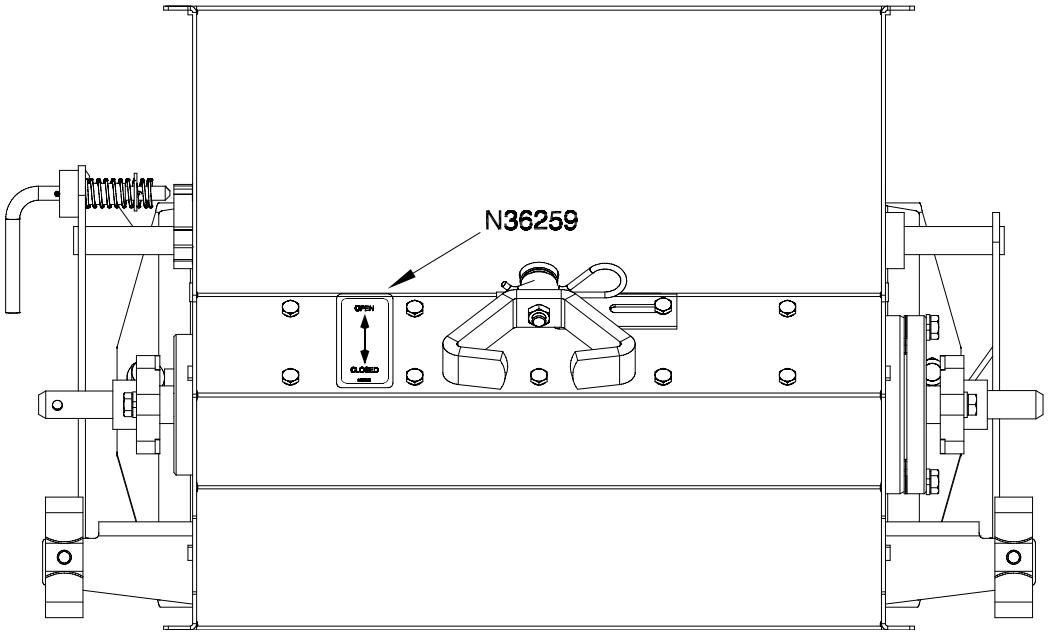

Safety Signs - Continued

Main Frame

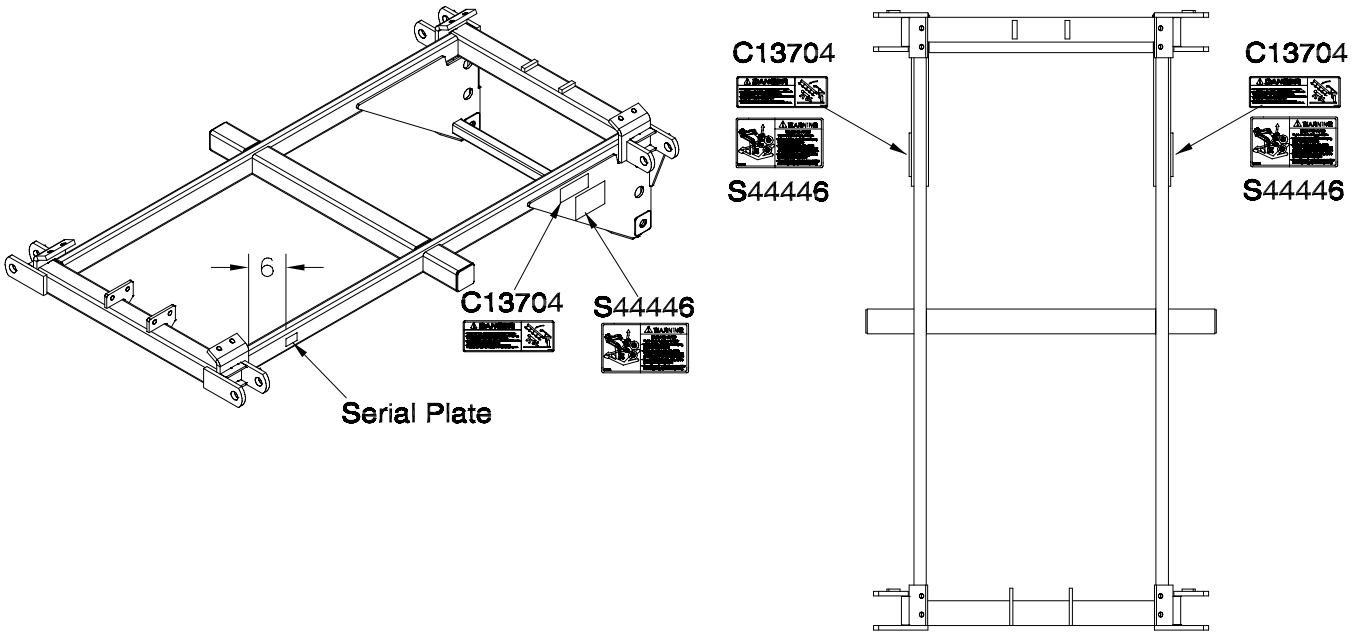

Rear Axle Bracket

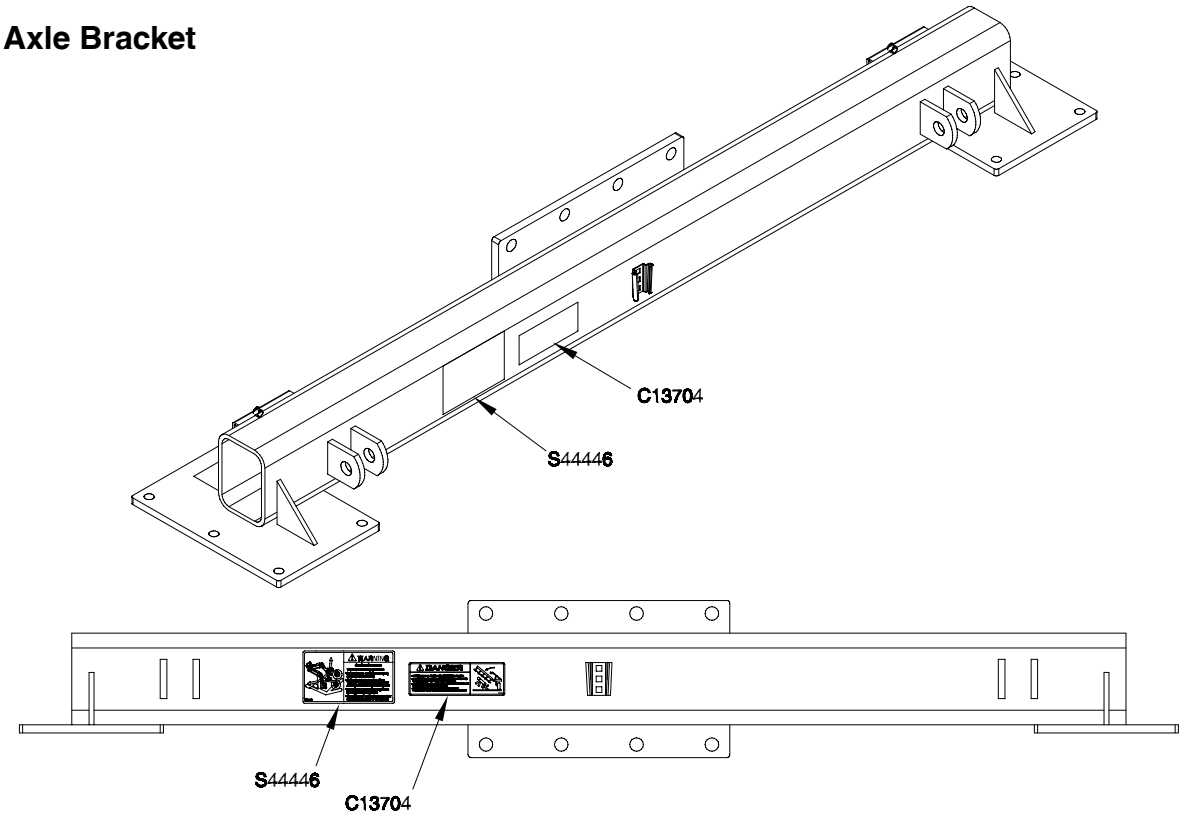

Lighting and Marking

MORRIS recommends the use of the correct lighting and marking to meet the ASAE standard for roadway travel. Be familiar with, and adhere to, local laws.

Amber warning and red taillights secured on the machine promote correct transportation of this implement.

Note: Always replace missing or damaged lights and/or connectors.

Amber warning and red taillights must be mounted to the rear of the implement and be visible from front and rear. The lights must be within 16 inches (41 cm) of the extremities of the machine and at least 39 inches (99 cm) but not over 10 feet (3 m) above ground level.

Note: Always replace missing or damaged front, side, rear reflectors and SMV emblem.

Section 2: Specifications

Section Contents

Transport Dimensions 2-3

Specifications

CX8105 Specifications and Options			
Base Size		25’ (7.62 m)	31’ (9.45 m)
Total Weight	- 10" (25.4 cm) Spacing	20,119 lb (9145 kg)	21,404 lb (9729 kg)
	- 12" (30.5 cm) Spacing	19,316 lb (8780 kg)	20,535 lb (9334 kg)
Axle Weight (Empty)	- 10" (25.4 cm) Spacing	12,583 lb (5720 kg)	13,355 lb (6071 kg)
	- 12" (30.5 cm) Spacing	12,100 lb (5500 kg)	12,833 lb (5834 kg)
Hitch Weight (Empty)		1672 lbs (760 kg)	1672 lbs (760 kg
Working Width	- 10” (25.4 cm) - 12” (30.5 cm)	25’ (7.62m) 25’ (7.62m)	30’ (9.14m) 31’ (9.45m)
Number of Shanks	- 10” (25.4 cm) - 12” (30.5 cm)	30 25	36 31
Frame Width	- Main - Wing Inner	5’ (1.524m) 10’ (3.048m)	5’ (1.524m) 13’ (3.962m)
Transport Position	- Width - Height - Length	9’ 10” (3m) 13’ 9” (4.19m) 36’ 2” (11 m)	9’ 10” (3m) 16’ 2”(4.93m) 36’ 2” (11 m)
Tires - Cart		(2) 600/50-22.5 Alliance Tire	(2) 600/50-22.5 Alliance Tire
- Main Frame Rear Wheels		(4)12.5Lx15 FI Load Range F	(4)12.5Lx15 FI Load Range F
- Wing Frame Front Castor Wheels (1 per wing)		(2) 12.5SLx15 12 Ply Rating	(2) 12.5SLx15 12 Ply Rating
- Wing Frame Rear Wheels (1 per wing)		(2) 12.5SLx15 12 Ply Rating	(2) 12.5SLx15 12 Ply Rating
Tank Capacity	- Front Tank	60 Bu (2110 L)	
	- Rear Tank	45 Bu (1585 L)	
	- Third Tank - Optional	10 Bu (350 L)	
	- Total	2 Tanks - 105 Bu (3695 L) With 3rd Tank - 115 Bu (4045 L)	
Tank Screens		Standard	
Fan	- Rated Speed	Up to 5,000 r.p.m.	
	- Impeller Diameter	13" (33 cm) Diameter	
	- Noise Level	97.3 dB	
Hydraulic Drive - Blower drive piston type orbit motor 12cc (Closed Centre or Closed Centre Load Sensing systems required)		Blower and VRT (Minimum 21 U.S. gal./min.) (80 l/min.) (Minimum 2100 p.s.i.) (14,469 kPa)	
Metering	- Ground Drive	Standard	
	- Variable Rate/GPS Compatible	Optional	
Opener	- Trip Out Force	Increases proportionally with Packing Force to a maximum of 600 lbs (272 kg)	
	- Packing Force	Adjustable from 70 lbs to 170 lbs (31.7 kg - 77.1 kg)	
	- Packer Wheel	4.50” x 16” Semi Pneumatic Otico tire 4.80” x 16” Semi Pneumatic or Pneumatic 5.50” x 16” Semi Pneumatic Otico tire 5.50” x 16” Semi-Pneumatic 4.00” x 16” “V” Crown	
Opener to Ground Clearance		12” (30.5 cm)	
Frame to Ground Clearance		32” (81 cm)	
Frame Depth		94” (238.8 cm) center to center	
Rank to Rank Spacing		47” (119.4 cm) center to center	
Number of Ranks		3 Rows	
Shank to Shank Spacing		30” (76.2 cm) on 10” (25.4 cm) Spacing 36” (91.4 cm) on 12” (30.5 cm) Spacing	
Weight Kit		Optional	
Safety Lights		Standard	
Safety Chain		Standard	

Specifications are estimates and subject to change.

Transport Dimensions

Notes

Section 3: Checklist

Section Contents

Manuals 3-2
Parts Manual 3-2
Assembly Manual 3-2
Checklist 3-3

Checklist

SAFETY-ALERT SYMBOL

Watch for this symbol. It identifies potential hazards to health or personal safety. It points out safety precautions. It means:

ATTENTION - BE ALERT.

Your safety is involved.

Manuals

Note: Pre-Delivery Inspection Form must be completed and submitted to Morris Industries within 30 days of delivery date.

Warranty Void if Not Registered

Parts Manual Order Part Number N50162

Assembly Manual Order Part Number N62399

Checklist

Please read the Operator's Manual carefully and become a "SAFE" operator.

Adopt a good lubrication and maintenance program.

General

____Check if assembled correctly.

____Proper chain tension.

____Check hose connections.

____Ensure cleanout door and tank lid are connected correctly.

Lubrication - Grease

____Metering Drive

____Hitch Pivot

____Castor Pivots

____Opener Wheel Hubs

____Wheel Hubs

Lubrication - Oil

____Drive chains

Tire Pressure

____See tire chart in Maintenance, Section 6.

Transport

____Tighten wheel bolts.

____Check hose connections.

____Accumulator pressure is at 0.

____Ball valves are in locked position.

OWNER REFERENCE

Model: _____

Serial No: _____

Dealer: _____

Town: _____ State: _____

Phone: _____

OWNER/OPERATOR: _____

Date: _____

TAKE SAFETY SERIOUSLY.

DO NOT TAKE NEEDLESS CHANCES!!

Notes

Section 4: Introduction

Section Contents

Introduction 4-2

Introduction

This Operator's Manual has been carefully prepared to provide the necessary information regarding the operation and adjustments, so that you may obtain maximum service and satisfaction from your new MORRIS CX 8105 Air Drill.

To protect your investment, study your manual before starting or operating in the field. Learn how to operate and service your CX 8105 Air Drill correctly, failure to do so could result in personal injury or equipment damage.

If you should find that you require information not covered in this manual, contact your local MORRIS Dealer. The Dealer will be glad to answer any questions that may arise regarding the operation of your MORRIS CX 8105 Air Drill.

MORRIS Dealers are kept informed on the best methods of servicing and are equipped to provide prompt efficient service if needed.

Occasionally, your CX 8105 Air Drill may require replacement parts. Your Dealer will be able to supply you with the necessary replacement parts required. If the Dealer does not have the necessary part, the MORRIS Factory will supply the Dealer with it promptly.

Your MORRIS CX 8105 Air Drill is designed to give satisfaction even under difficult conditions. A small amount of time and effort spent in protecting it against rust, wear and replacing worn parts will increase the life and trade-in value.

Keep this book handy for ready reference at all times. It is the policy of Morris Industries Ltd. to improve its products whenever it is possible to do so. The Company reserves the right to make changes or add improvements at any time without incurring any obligation to make such changes on machines sold previously.

Introduction - Continued

The MORRIS CX 8105 is a 105 bushel two tank cart, with a 43:57 ratio tank split. The CX 8105 can be equipped with an optional 10 bushel third tank for use with small seeds. The high clearance frame gives easy access to the metering wheels and the easiest cleanout in the industry. The tank lids are easily accessed by the convenient stairs and tank walkway.

Each tank has its own metering system and metering drive. Included with the unit is a sample collector box that an operator can use to confirm seeding rates.

The metering system incorporates spiral fluted wheels. The size of the metering wheel is matched to the number of outlets on the patented flat fan divider giving the best in accuracy. The spiral fluted metering wheels combined with the multi-range transmission allows a full range of products such as canola and peas to be seeded without having to change the metering wheels.

The Air Cart comes equipped with a monitor that senses all bin levels, motion of all metering shafts and fan speed. It also gives ground speed and provides an acre meter.

High quality 2 1/2" diameter hose is standard equipment for the distribution system. The patented flat fan divider, which is matched in size to the metering wheel, ensures final accurate distribution of the product.

Notes

Section 5: Operation

Section Contents

Application 5-3
Tractor 5-3
Hitching 5-4
Hitching to Tractor 5-4
Unhitching from Tractor 5-6
Transport 5-7
Speed 5-7
Lights 5-7
Transport to Field Position 5-8
Transport to Field Position - Continued 5-9
Meter Drive Wheel Engagement 5-9
Field to Transport Position 5-10
Field to Transport Position - Continued 5-11
Meter Wheel Disengagement 5-11
Metering System 5-12
Secondary Hose Installation 5-13
Seed Plate Sizes 5-14
Seed Plate Installation 5-15
Bin Level Adjustment 5-16
Filling Tank 5-16
Unloading Tanks 5-18
Rate Charts 5-19
Spacing Sprocket 5-19
Rate Chart Use 5-20
Extra Low Rates 5-21
Extra High Rates 5-21
Fertilizer Rate Chart 5-22
Seed Rate Chart 5-23
Slow Speed Seed Rate Chart 5-24

Section Contents - Continued

Rate Calibration 5-25
Seeding Fine Seeds (Canola, Mustard, etc.) 5-27
Applying Inoculant 5-27
Hydraulic Fan Drive 5-28
Fan Speed Recommendations 5-29
Double Shoot Settings 5-30
  Plenum Damper Settings 5-30
  Collector Valve Settings 5-31
  Flapper Valve Run Test 5-31
Opener Operation 5-32
  Accumulator System Operation and Pre-Charge Information 5-32
  Setting Maximum System Pressure (Trip Out Force) 5-33
  Relieve System Pressure 5-34
  Normal Operation 5-34
  Pressure Adjustment (On the go) 5-35
Depth Adjustment 5-36
Work Switch 5-38
Quick Tips 5-39
  Shank Trip Force 5-39
  Packing Force 5-39
  Hydraulic System 5-39
  Lifting and Lowering the Openers 5-39
  Setting the Seed Depth 5-40
  Seeding Conditions 5-40
  Straw Management 5-40
  Air Drill Frame 5-41
  Trouble Shooting Guide 5-41
Wing Lift Hydraulics 5-42
Opener Hydraulics 5-43
General Guidelines 5-48
  Turning 5-49
  Seed Rate Settings 5-49
  Fertilizer Application 5-49
  Fan Setting 5-49
  Product Application 5-49
  Adjustments and Operational Checks 5-50
  Checking Seed Flow 5-50
  Moisture Alert 5-50
  Air Leaks 5-50
  Tank Low in Product 5-50
  Monitor 5-51
General Field Operation 5-51
  Clutch Switches 5-51

CAUTION

BE ALERT

SAFETY FIRST

REFER TO SECTION 1 AND REVIEW ALL SAFETY RECOMMENDATIONS.

Application

The Morris CX 8105 utilizes independent parallel link openers. Each opener moves independently of the frame and each other to follow every contour of the land closely. The unique design of the opener allows the Morris CX 8105 to be used in a variety of seeding applications from conventional to zero till applications.

Tractor

Tires

- Proper ballast and tire pressure are required when pulling heavy implements.
- Consult your tractor operator's manual and follow all recommended procedures.

Hydraulics

- Wipe all hydraulic fittings and couplers with a clean cloth to avoid contaminating the system.
- Check that hydraulic reservoir is filled to the proper level.

Drawbar

- Centre and pin in a fixed position for easier hitching and greater stability.

Warning

Do not permit smoking, sparks or an open flame where combustible fuels are being used. Keep the work area well ventilated.

Warning

Do not search for high pressure hydraulic leaks without hand and face protection. A tiny, almost invisible leak can penetrate skin, that requires immediate medical attention.

Hitching

Caution

A safety chain will help control towed machines should it accidentally separate from the drawbar while transporting. A runaway machine could cause severe injury or death. Use a safety chain with a strength rating equal to or greater than the gross weight of the towed machines.

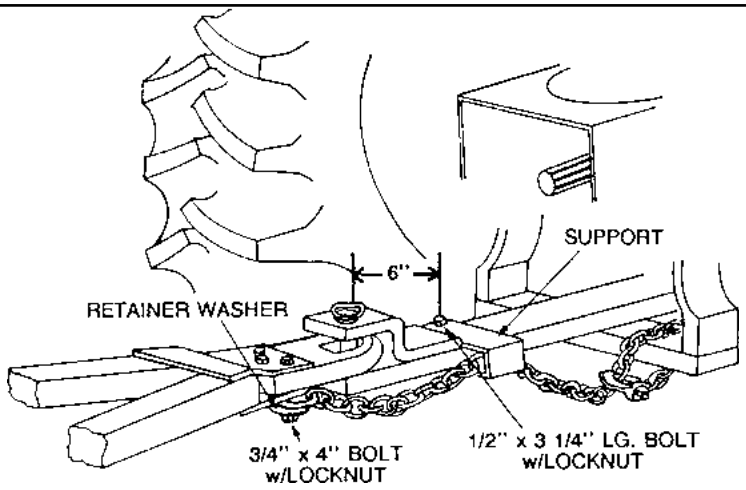

Attach safety chain to the tractor drawbar support or other specified anchor location with the appropriate parts.

Hitching to Tractor

- Ensure swinging drawbar is locked in the centre position.
- Ensure hitch pin is in good condition.
- Level clevis with tractor drawbar using hitch jack.
- Back tractor into position and attach hitch clevis to drawbar, using an adequate hitch pin.
- Lock hitch pin in place with a hairpin or other proper locking device.
- After tractor to implement connection is made, relieve pressure off the hitch jack.
- Place hitch jack in transport position.
- Route safety chain through chain support and drawbar support.
- Lock safety hook onto chain.

Note: Provide only enough slack in chain to permit turning.

Caution

Dirt in the hydraulic system could damage O-rings, causing leakage, pressure loss and total system failure.

Hitching to Tractor - Continued

- Place implement support stands into transport postion.
- Ensure hydraulic hose quick couplers are dirt free.
- Inspect all fittings and hoses for leaks and kinks. Repair as necessary
- Connect the hydraulic hoses to the tractor quick couplers.

Note: The 3/8" diameter hose for fan motor case drain and pressure reducing valve, must be run directly into the hydraulic tank otherwise damage will occur to the seal in the motor. If the hose is run through the filler cap then ensure the cap is *VENTED*. A quick coupler can still be used between the tractor and the seeding tool.

- Mount digital pressure gauge and VRT console in tractor cab with the LCD visible and with in easy reach to operate.
- Route the digital pressure gauge harness away from moving parts and sharp protrusions. Connect the red wires to the positive (+) terminal of the battery. Connect the black wires to the negative (-) terminal of the battery.

Support Stands Raised

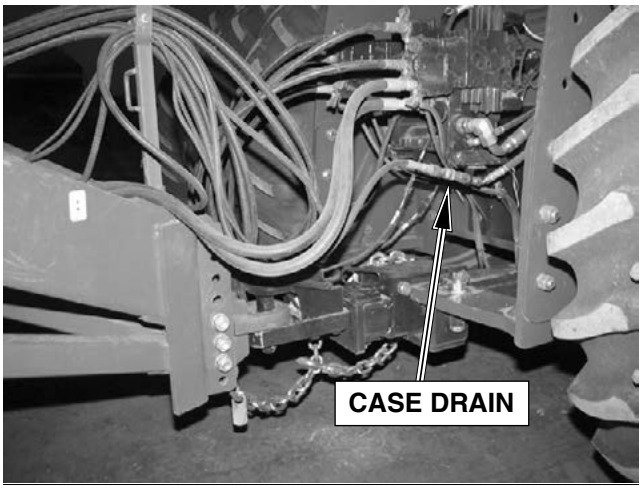

Hydraulic Coupling on Tractor

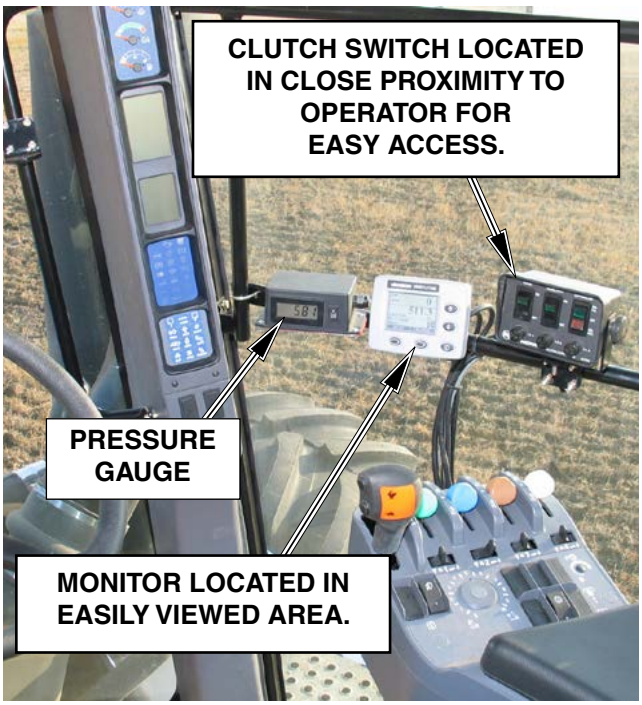

Unhitching from Tractor

- Place implement support stands into storage postion.
- Pin hitch jack in storage position.
- Lower hitch jack taking the weight off the hitch clevis.

Note: For added safety it is recommended to unload any material that may be in the tanks.

- Ensure all transport locks are properly secured.
- Open "Operating" valve to service position and relieve accumulator pressure from the opener system before uncoupling hydraulic hoses.
- Relieve pressure in the wing lift hydraulic hoses by positioning tractor hydraulic lever in "float" position or turn tractor engine off and cycle lever back and forth several times.
- Disconnect the VRT controller and monitor cables.
- Disconnect the hydraulic hoses.
- Remove the safety chain.
- Remove the drawbar pin.
- Slowly move tractor away from cultivator.

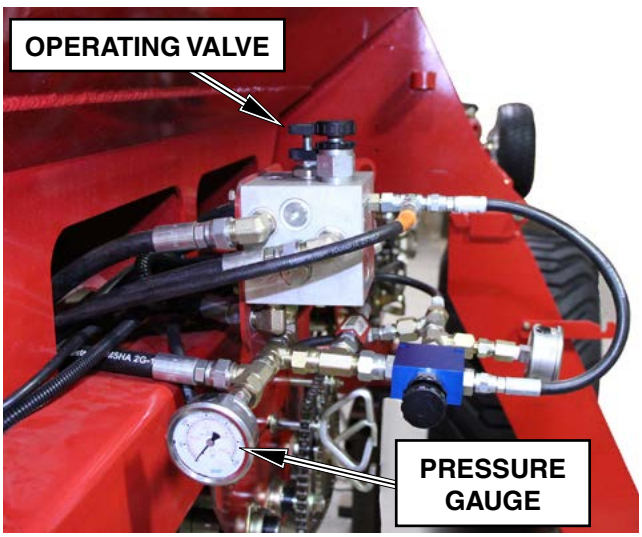

Transport

Observe all applicable safety precautions under transport heading in Safety, Section 1.

- Refer to Specifications, Section 2, for weight, transport height, and width.
- Transport with tractor only!
- Ensure safety chain is attached correctly to the towing vehicle and the hitch of the implement.
- Inspect tires for any serious cuts or abrasions. If such has occurred, tire should be replaced.
- Raise and lower wings on **level ground**.
- Never raise or lower wings when moving.

Speed

- Always travel at a safe speed. Do Not Exceed 20 mph (32 kph).
- The weight of the implement being towed *must not exceed 1.5 times* the weight of towing vehicle.

Lights

- Ensure proper reflectors are in place, refer to Safety, Section 1.
- Use flashing amber warning lights, turn signals and SMV emblems when on public roads.
- Be familiar with, and adhere to, local laws.

MORRIS INDUSTRIES LTD. WILL NOT BE RESPONSIBLE FOR ANY DAMAGES OR OPERATOR INJURY RESULTING FROM NON-USE OR IMPROPER USE OF TRANSPORT LOCKS.

⚠ Caution

Raise and lower wings on level ground. Never raise or lower wings when moving.

Transport - Continued

Transport to Field Position

- Position machine on **level ground**.
- Stop tractor, and engage park brake.
- As a precaution, check surrounding area to be sure it is safe to lower wings.
- Unlock both wing valves and the opener valve. Do not walk under raised wings.
- Operate opener hydraulics, to ensure all openers are retracted.
- Operate wing lift hydraulics to **ensure wings are fully retracted.**
- Operate wing lift hydraulics to first open transport lock, secondly to lower wings until fully lowered and the cylinder shafts are completely extended to allow wings to float when working in uneven land. **Never raise or lower wings when moving.**

Note: When raising or lowering wings, do so in one continuous motion until fully up or down. Do not stop flow part way allowing wings to fold on their own. This may disrupt the sequence of operation.

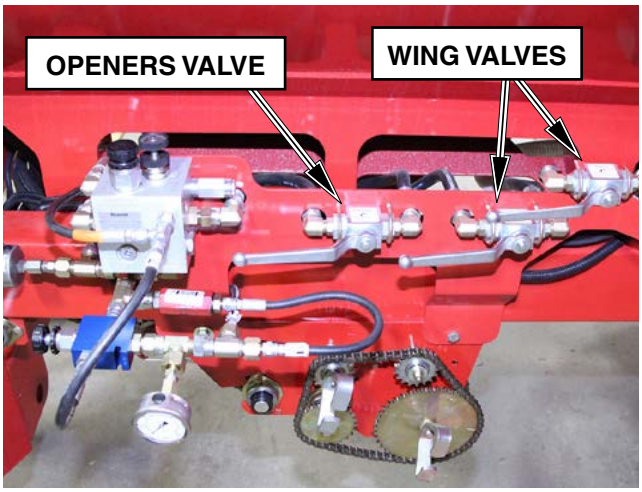

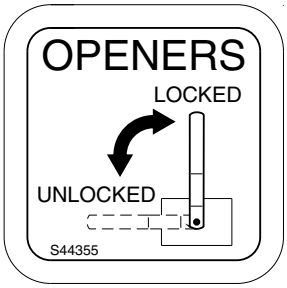

DECAL - S44355

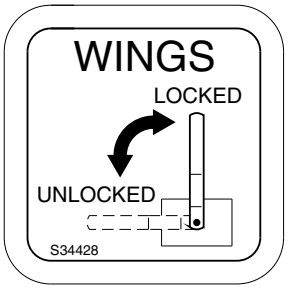

DECAL - S34428

⚠ Danger

Always stay clear of wings being raised, lowered or in elevated position. Ensure cylinders are completely filled with hydraulic fluid - wings may fall rapidly causing injury or death.

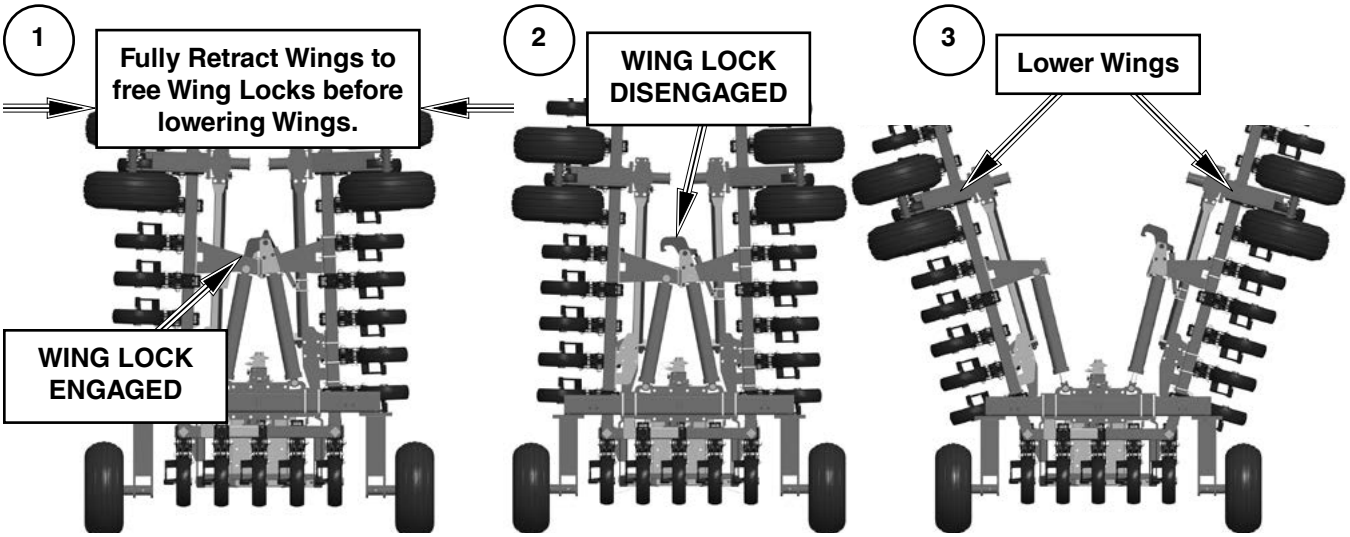

Transport - Continued

Transport to Field Position - Continued

Meter Drive Wheel Engagement

To engage **Meter Drive Wheel** follow the procedures below:

- Place wing lift hydraulics into float position to allow the oil from the gland side of the Meter Drive Wheel cylinder to flow back to the tractor.
- Operate the opener hydraulics to lower openers and engage **Meter Drive Wheel.** Pressure on **Meter Drive Wheel** should be set at 300 psi (2068 kPa)
- Adjust pressure as required with the Pressure Reducing Valve.
- Place wing lift hydraulics into neutral position.

Note: Opener operating pressure must be greater than the Meter Drive Wheel.

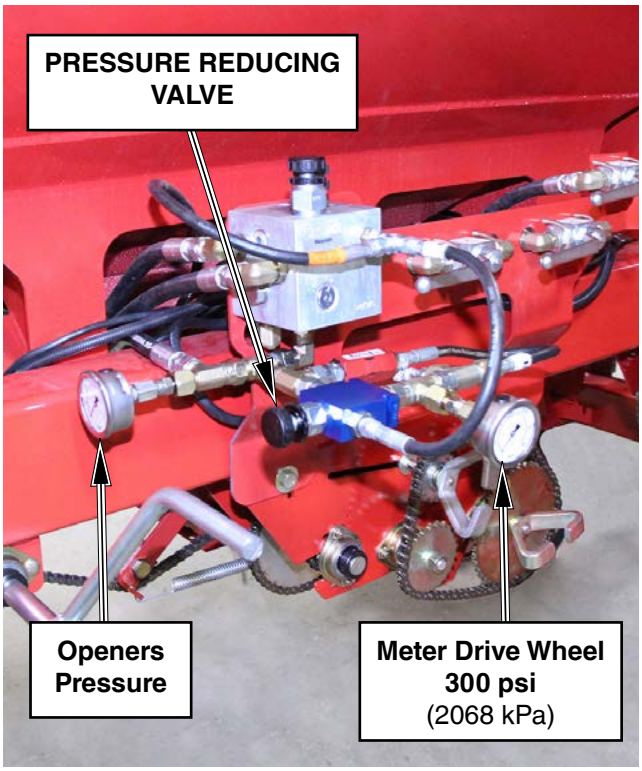

Transport - Continued

Field to Transport Position

- Position machine on **level ground**.
- Stop tractor, and engage park brake.
- Ensure wing lift cylinders are fully extended.

Note: The wing lift cylinders must be fully extended to ensure proper operation of the flow control valve (FCV) manifold.

- Operate the opener hydraulics, to raise the openers fully.
- Operate the wing lift hydraulics, to first raise the wings fully into transport position, secondly to engage transport lock. **Never raise or lower wings when moving.**

Note: When raising or lowering wings, do so in one continuous motion until fully up or down. Do not stop flow part way allowing wings to fold on their own. This may disrupt the sequence of operation.

- Lock both wing lift valves and the opener valve. Do not walk under raised wings.
- Ensure safety chain is properly installed, see "Hitching to Tractor" of the Operation Section.

⚠ Danger

Always stay clear of wings being raised, lowered or in elevated position. Ensure cylinders are completely filled with hydraulic fluid - wings may fall rapidly causing injury or death.

For long distance transport or storage bleed all pressure from Opener hydraulic system:

- Operate the opener hydraulics, to raise the openers fully.
- Screw "Operating" valve out to open position.
- Put tractor remote in "float" position.
- Let openers drop and pressure go to 0 psi (or near 0 psi) on gauge.
- Lift openers to transport position and lock "Openers" valve.

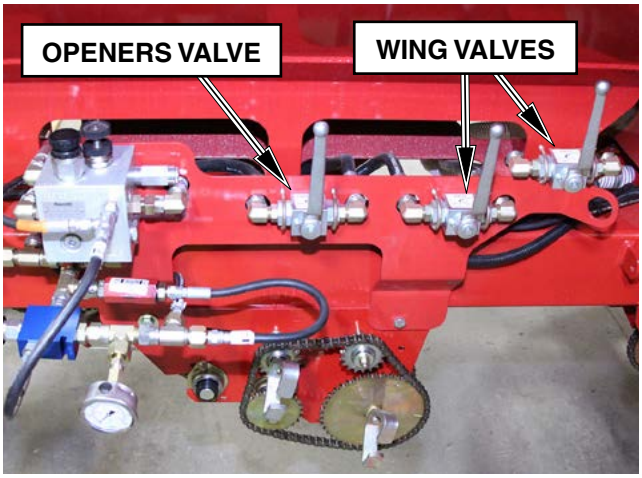

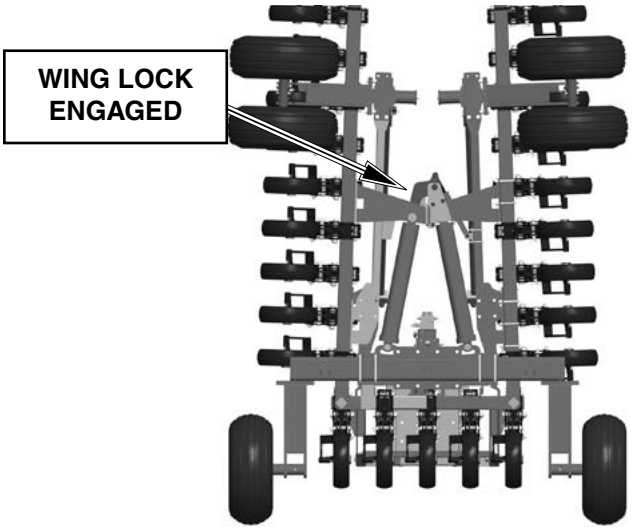

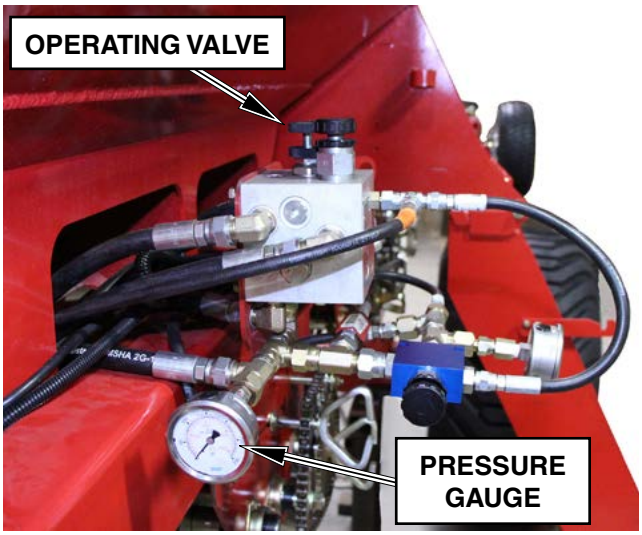

Transport - Continued

Field to Transport Position - Continued

Meter Wheel Disengagement

To disengage **Meter Drive Wheel** follow the procedures below:

- Raise and lock openers in transport position as outlined on previous page.
- Operate the wing lift hydraulics to raise the wings fully into transport position, this will raise the Meter Drive Wheel into transport postion.

Metering System

The 8105 Air CART uses a combination of metering wheels and spacers shown below. The metering wheel is individually sized to correspond to the number of outlets at the connected secondary head and the spacers make up the space between the wheel and the body. Some openings may be blanked off depending on the number of secondary divider heads used on the seeding tool.

The 8105 Air Cart can meter all types of seeds and fertilizers by simply installing the correct seed plate. See *"Seed Plate Settings"* for more details.

Different rates are easily obtained using the selection of quick change sprockets that attach to either of the two meter transmissions.

Note: Before putting product into the tanks check the following:

1. The correct Seed Plates are installed for the product being applied.
2. The clean-out doors are fully closed and sealed.
3. The plastic bag covering the fan is removed.

Important

Ensure distribution system is balanced. It is very important that head outlets only vary by one. (i.e. use only 7 and 8 together, 8 and 9 together, 9 and 10 together)

Note: The number of outlets on the divider head must match the metering wheel size.

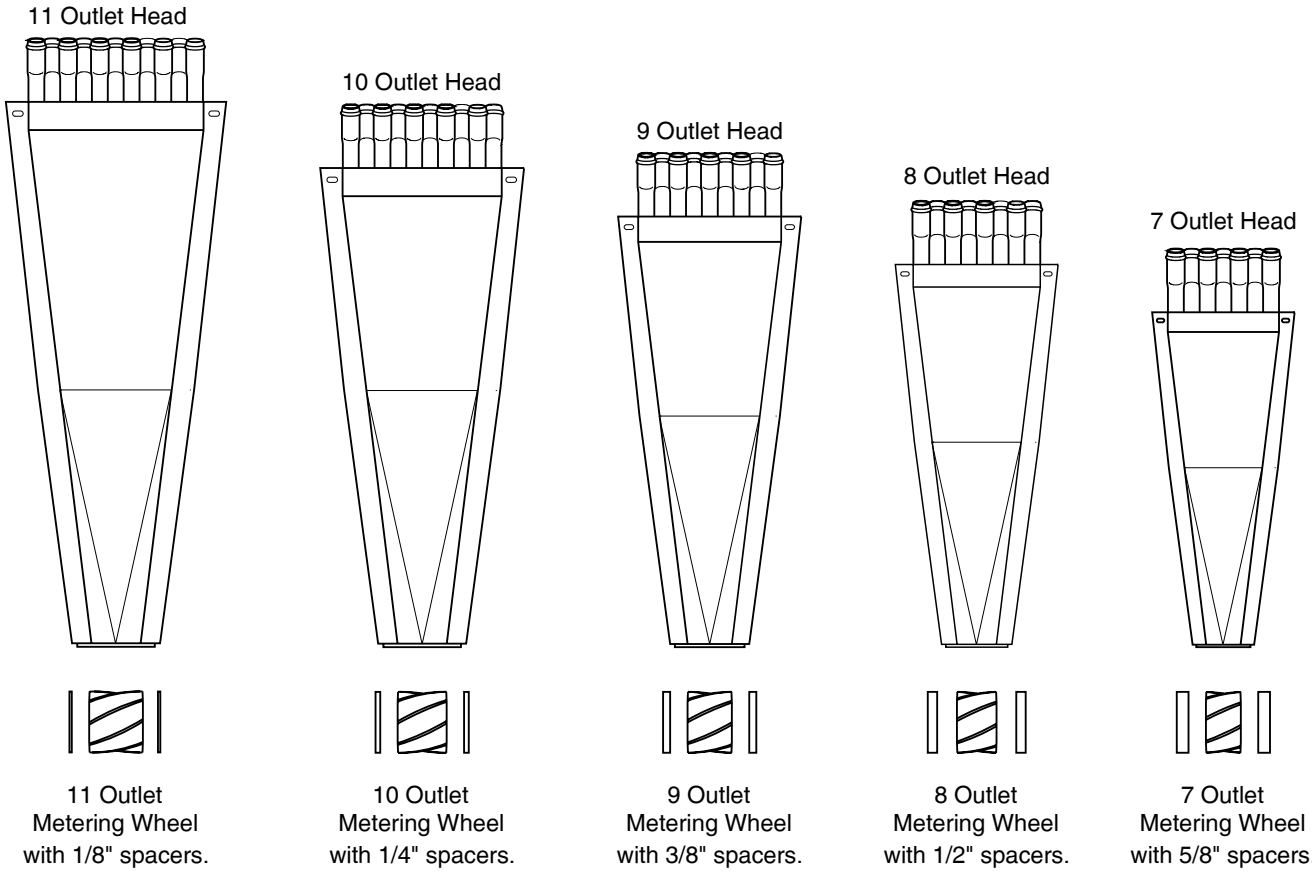

11 Outlet Metering Wheel with 1/8" spacers.

10 Outlet Metering Wheel with 1/4" spacers.

9 Outlet Metering Wheel with 3/8" spacers.

8 Outlet Metering Wheel with 1/2" spacers.

7 Outlet Metering Wheel with 5/8" spacers.

Metering System - Continued

Secondary Hose Installation

The lengths of the 15/16” (24 mm) diameter hoses are **very important.**

For accurate distribution the secondary hoses have to be arranged by length symmetrically around the centre line.

The **longest** hoses **have to be** in the **centre** of the divider head. These hoses would normally feed the openers furthest away from the head.

- Ensure that the secondary hoses 15/16” (24 mm) diameter do not run higher than 3” (76 mm) above the height of the flat fan divider head.
- Allow an extra 3” (76 mm) of hose before cutting secondary hose for fitting in the seed boot.
- Always ensure that the secondary hoses are sufficiently long to accommodate tripping of trips.
- **Avoid sharp bends** in any of the hoses.
- Check for pinch points and clearances when folding in and out of transport.

Important

Hot water is the only acceptable lubricant for the installation of the secondary hose.

The supplier advised MORRIS that WD-40 or any other lubricant (i.e. liquid detergent) will have a negative effect on the chemical stability of the hose, resulting in the degradation and failure of the hose due to Environmental Stress Cracking.

Important

Distribution uniformity will be adversely affected if hoses are incorrectly installed.

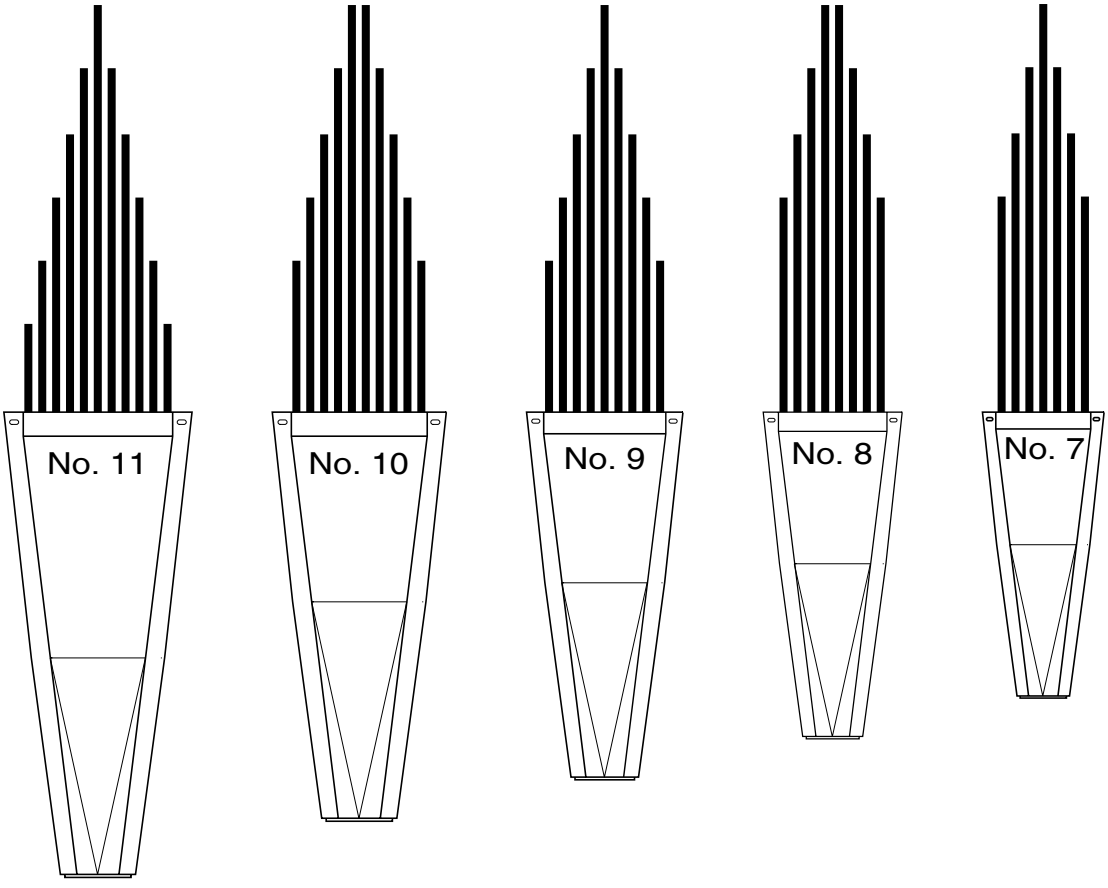

Metering System - Continued

Seed Plate Sizes

The seed plate comes in 3 different sizes, fine, medium and coarse. Each seed plate is designed for use with specific product types. The coarse seed plate is offered in two versions - standard and coated. The coated seed plate is recommended for DAP fertilizers.

The three different seed plates allow all types of seeds and fertilizers to be metered.

The seed plate has only one position, fully closed against the back plates assembled to the metering body.

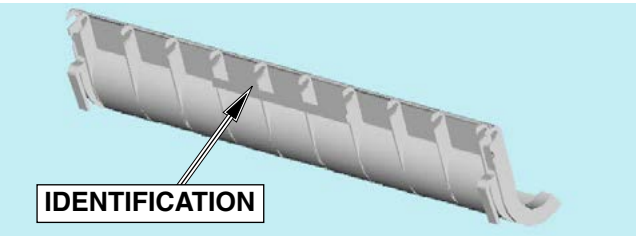

Seed Plate - Stainless Steel

The stainless steel seed plates are identified by an inscription (FINE, MEDIUM, or COARSE) on the back as indicated.

Seed Plate Usage

Product	Seed Plate
Canola Canary Seed Clover/Alfalfa Flax Mustard Nitragin Edge Fortress Rival	Fine
Barley Lentils Milo Oats Rice Wheat Safflower Nodulator Tag Team Fine Fertilizer (no Sulphur or Potash) 28-0-0 Fertilizer 46-0-0 Fertilizer 34-17-0 Fertilizer 20.5-0-0-24 Fertilizer	Medium
Beans Peas Soybeans Sunflowers 0-0-60 Fertilizer 0-45-0 Fertilizer 10-46-0-0 Fertilizer 11-51-0 Fertilizer Fertilizers containing Sulphur and/or Potash	Coarse

Metering System - Continued

Seed Plate Installation

- Ensure Tank Shut-Offs are closed if there is product in the tanks.

Note: Tank Shut-Offs are only for use when inspecting/servicing meter body with product in tank.

- Install seed plate with hook to the top of the metering body.
- Rotate seed plate towards the metershaft with top part of seed plate hooked to the shaft running through the top of the meter body.
- Let the seed plate hang in the metering body.
- Rotate seed plate lock down to push seed plate against the back plate.
- Install the "J" bolts into the slotted lug welded to the meter body and tighten the wing nuts. **Do not** adjust the flange nuts on the "J" bolts. These nuts are preset on assembly. Refer to Maintenance Section under "Seed Plate Adjustment" for details.
- Ensure Tank Shut-Offs are opened.

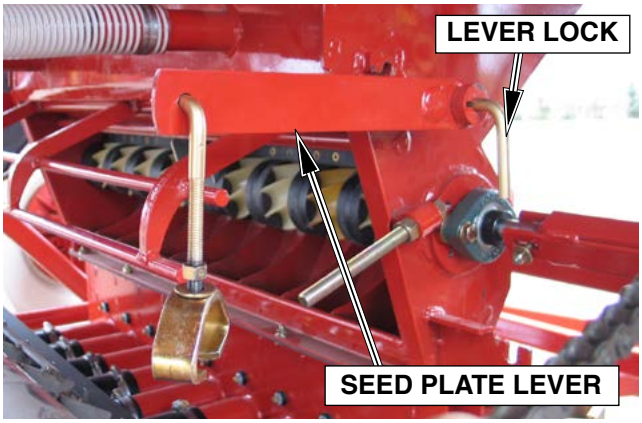

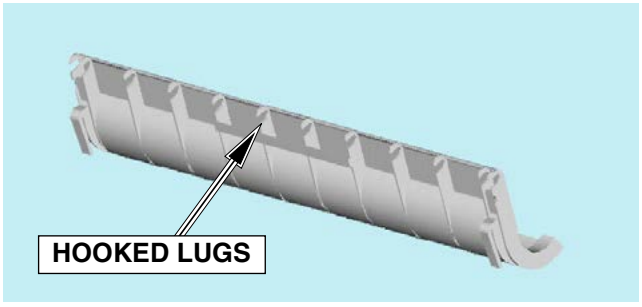

Seed Plate

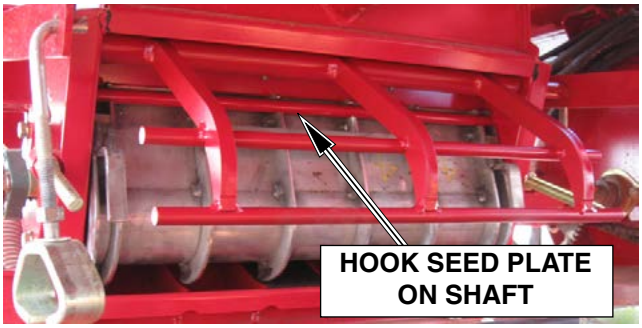

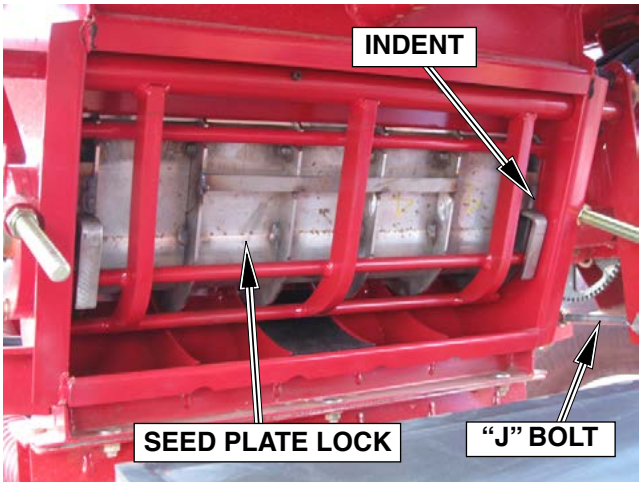

Important

Seed Plate Position

Once "J" bolt wing nuts are tightened, indents in the side plates should just be visible in the slotted area of the hook.

Bin Level Adjustment

- Adjust bin level sensor to desired alarm point.
  - Top position for large seeds, high rates of fertilizer.
  - Middle postion for cereal grains.
  - Lower postion for fine seeds.

Filling Tank

The Morris 8105 Air Cart is equipped with 2 tanks. The front tank is for seed and the rear tank is for fertilizer. The optional third tank is for use with small seeds. However, ALL tanks can be used for the same product.

- Open lid fully on tank being filled.
- Check and remove any debris inside tank.
- Remove clean-out door.
- Remove seed plate.
- Check for debris inside metering body.
- Ensure Tank Shut-Offs work freely.

Warning

Do not enter tank unless another person is present.

Important

Before putting product into the tanks check the following:

1. **The correct seed plate is installed for product being applied.**
2. **The clean-out doors are fully closed and sealed.**
3. **The plastic bag covering the fan is removed.**
4. **Inspect all augers used in handling the products for seeding. Run augers to clean out any debris inside auger so it does not get transferred to air cart tanks.**

Inspect Metering Body

Filling Tank - Continued

- Check that the correct seed plate is installed for the product being applied.
- Fully close and seal the clean-out door.
- Ensure the auger screen is in place.
- Always use screen to filter debris when filling.
- Adjust bin level sensor to desired alarm point.

Note: Even small fertilizer lumps can cause problems with plugging. All possible precautions should be taken to prevent lumpy fertilizer from entering the tank.

- Clean lid seal and ensure lid seal is positioned correctly before closing tank lid.
- Remove the plastic bag covering fan.
- Check lid for air leaks with your hands once air cart fan is operational. See Maintenance Section 7.
- Check metering body for air leaks.

Note: Before seeding it is recommended that after a rain or dew that fan be run for a few minutes to eliminate moisture in the system.

Clean-Out Door

Tank Screen to filter debris

Important

Do not exceed 10 mph (16 kph)

in field operation.

Note: Only the two tank version has storage under walkway.

Walkway Storage

Unloading Tanks

Emptying tanks is quick and easy to do.

- Position an auger under the tank to be emptied. **Note:** Ladder must be in transport position to access tanks.
- Remove collector bottom.
- Move flapper valves to **"Bottom Pipe"** position on the collector body. (**Double Shoot Only**)
- Loosen inspection door approximately 1" (25 mm). **Note:** The wing nuts will be near the end of the threaded rod.
- Start auger.
- Open seed plate to first lock point, this will allow material to flow through the metering body into the auger.
- Once all material stops flowing, move "Shut-off" levers in and out a few times to dislodge any product and ensure free movement.
- Remove meter body inspection door and seed plate completely.
- Rotate meter shaft using crank to empty meter wheel flutes.
- Brush out remaining material in the corners and on top of the back plate.
- Reset flapper valves to correct position for product delivery. Ensure that the flapper settings are correct. This can be done by visually checking that the flappers are fully over and touching the side walls, sealing off the individual airstreams. The flappers can be adjusted by loosening the individual adjusting setscrews and applying pressure to the flapper forcing it against the side wall while tightening the setscrew.
- Reinstall correct seed plate for product being metered.
- Reinstall inspection door and collector bottom ensuring that the seals are free from leaks.

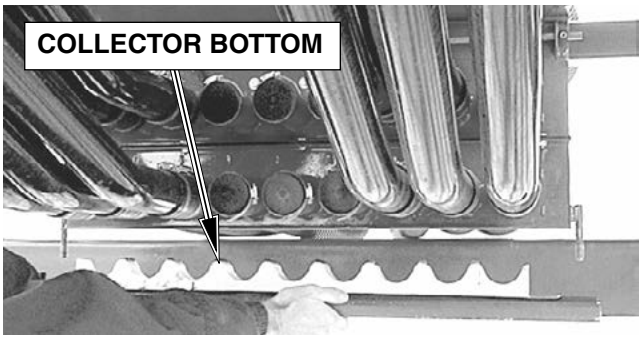

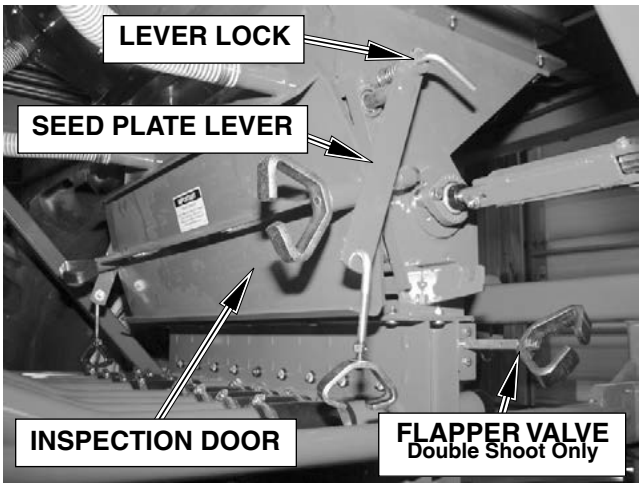

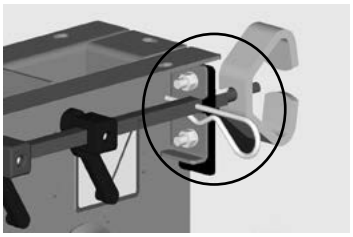

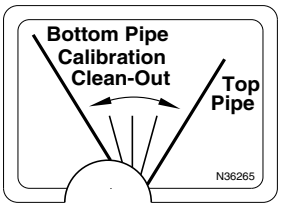

Double Shoot Only

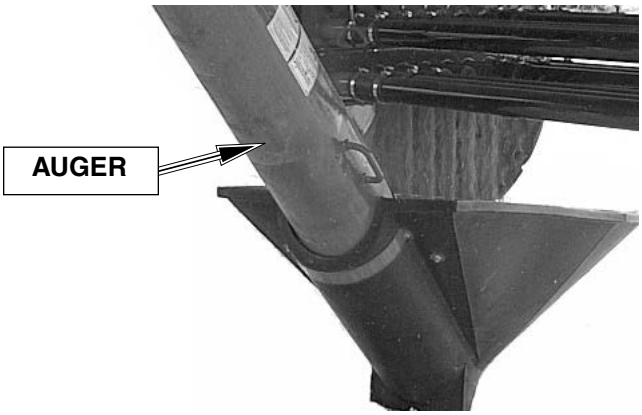

⚠ Danger

Keep all shields in place. Keep hands, feet and clothing away from auger intake, failure to do so will result in serious injury or death.

Rate Charts

Spacing Sprocket

The rate chart applies to all spacings listed below.

Check that the correct spacing sprocket is installed on your machine. This sprocket is located on the inner side of the rear transmission on the clutch output shaft and also on the calibration crank.

The spacing sprocket must be matched to the seeding tool trip spacing.

Determining Spacing Sprocket

To determine spacing sprocket for other spacings not listed in the chart use the following equation:

$$\text{New Spacing Sprocket} = \left(\frac{\text{New Spacing}}{12”}\right) \text{ x } 20$$

The rate charts and drive rates are all based upon 12” spacing - 20 tooth sprocket.

Note: Due to ratios of spacing the value may not be a whole number and should be rounded to nearest value.

Spacing Sprocket	
Opener Spacing	**Spacing Sprocket**
7.2” (183 mm)	12 teeth
7.5” (191 mm)	12 teeth
8” (203 mm)	13 teeth
9” (229 mm)	15 teeth
10” (254 mm)	17 teeth
12” (305 mm)	20 teeth
15” (381 mm)	25 teeth

Note: The rate charts should only be used as a guide. Variation in seed size, density, shape, tire pressure and wheel sinkage are all factors that can influence the seed rate.

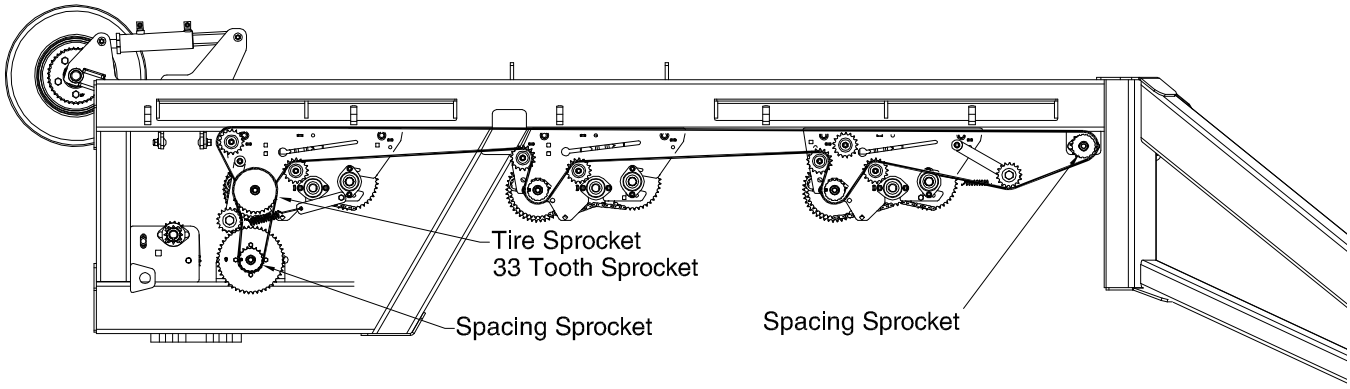

Rate Charts - Continued

Rate Chart Use

The rate chart applies to all spacings listed below.

The spacing sprocket must be matched to the seeding tool trip spacing see *"Spacing Sprocket"*.

The charts should only be used as a guide. Specific rates can be achieved by using the rate check method as outlined under *"Rate Calibration"*.

To determine a seed/fertilizer rate from the chart:

- Go to the desired rate along the line marked "Standard" of a specific graph. (i.e. 95 lbs/acre of wheat)
- Go straight up from that point to where that line is intersected by the graph. This will give the sprocket size required to give the particular rate chosen.
- At this intersection go straight across to the vertical line of the graph. This will give the sprocket size required to give the particular rate chosen. (i.e. 95 lbs/acre of wheat requires a 29 tooth sprocket)
- Change the Quick Change Sprocket see *"Metering Rate Adjustment"*.
- Perform a rate check to confirm the seed rate see *"Rate Calibration"*.
- Repeat the above procedure for the other tank.
- For very low or very high rates, see next page *"Extra Low Rates"* and *"Extra High Rates"*.

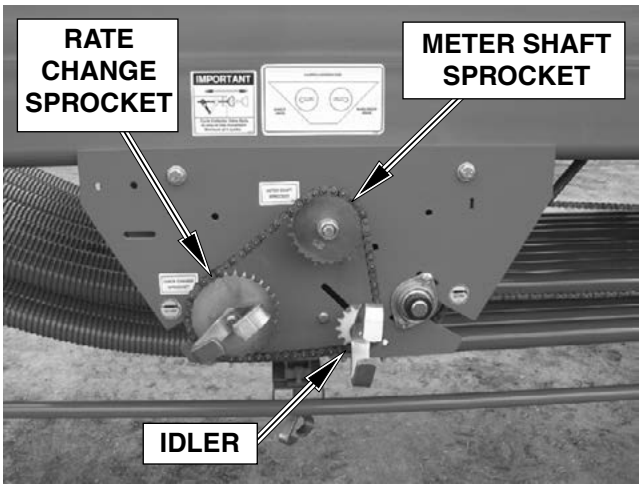

Note: The rate charts should only be used as a guide. Variation in seed size, density, shape, tire pressure and wheel sinkage are all factors that can influence the seed rate.

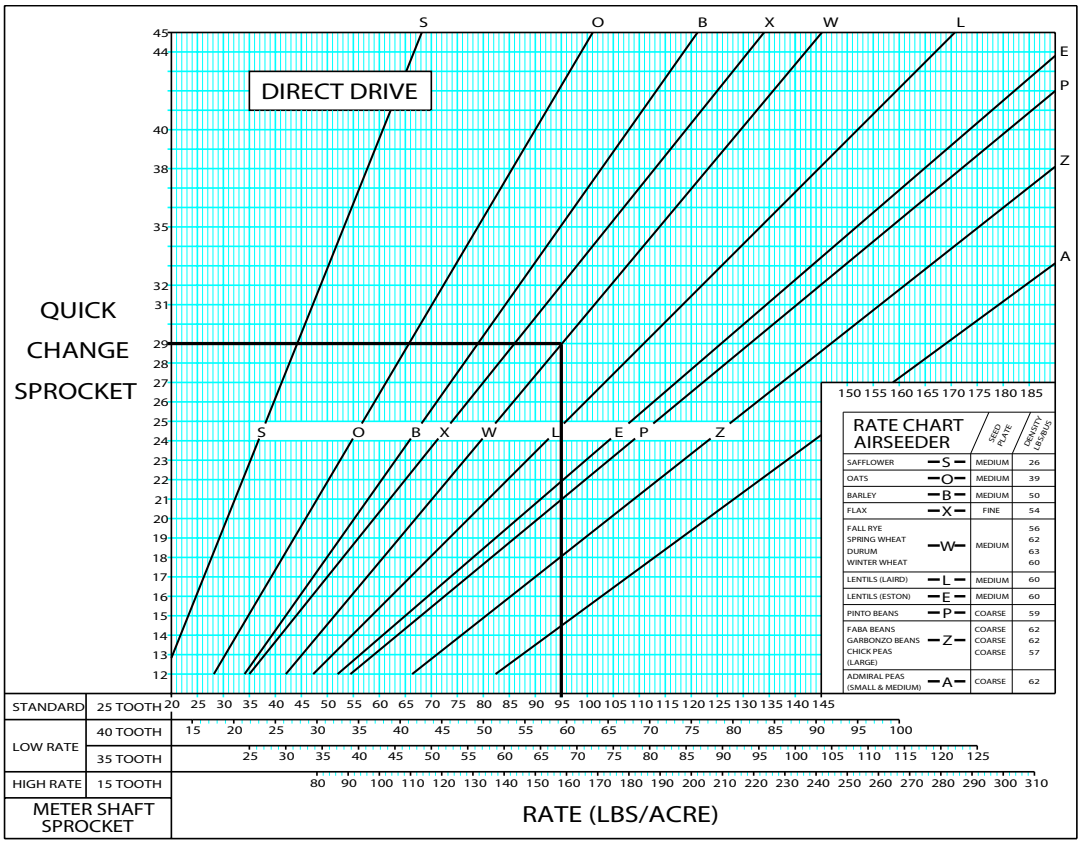

Rate Charts - Continued

Extra Low Rates

Although the charts show a minimum rate of 35 lbs. per acre for fertilizer and 20 lbs. per acre for seed, sometimes this is not low enough, especially when product is being metered from both tanks.

Rates under the values mentioned can be achieved by replacing the standard 25 tooth meter shaft sprocket on the front of the transmission with either a 35 or 40 tooth sprocket.

The rates obtained when using the 35 and 40 tooth sprocket are shown on the rate charts beside the respective size sprocket.

When both tanks are being used to meter the same product then the 25 tooth sprocket on each transmission must be changed. Now both transmissions will have the same size ***metershaft*** sprocket.

The same metering chain can be used with these larger sprockets up to a certain size of quick change sprocket.

To determine a rate from the chart:

- Go to the desired rate along the line next to the size of metershaft sprocket used.
- Go straight up from that point to where that line is intersected by the graph line of the particular product being metered.
- At this intersection go straight across to the vertical line of the graph. This will give the sprocket size required to give the particular rate chosen.
- Change the quick change sprocket and repeat the rate check to confirm the seed rate.
- Repeat the above procedure for the other tanks.

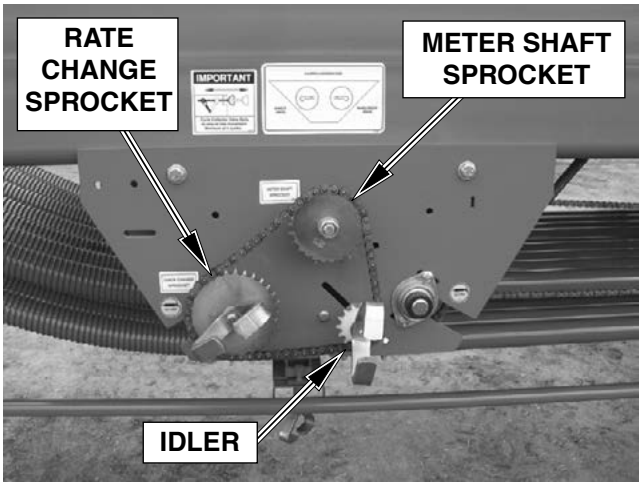

Rate	Metershaft Sprocket Size	Maximum Size of Quick Change Sprocket	Minimum Size of Quick Change Sprocket
Standard	25 Tooth	45 Tooth	12 Tooth
Low Rate (1)	35 Tooth	33 Tooth	12 Tooth
Low Rate (2)	40 Tooth	26 Tooth	12 Tooth
High Rate	15 Tooth	45 Tooth	18 Tooth

Extra High Rates

In areas where higher rates of product are required the metershaft sprocket is changed from the standard 25 tooth to a 15 tooth.

Use the method described under EXTRA LOW RATES to determine the required metering rate.

Rate Charts - Continued

Fertilizer Rate Chart

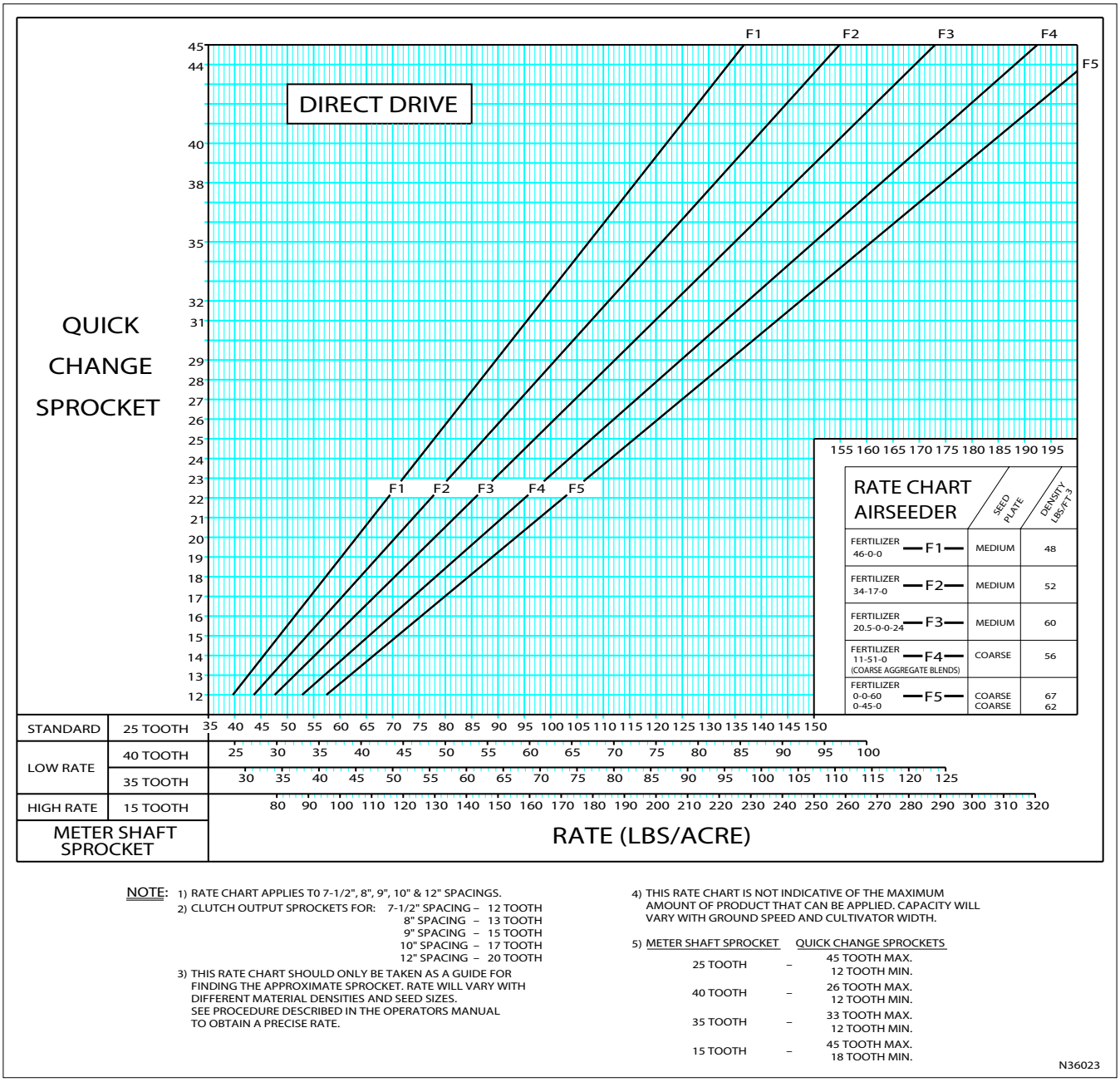

NOTE:
1) RATE CHART APPLIES T0 7-1/2", 8", 9", 10" & 12" SPACINGS.
2) CLUTCH OUTPUT SPROCKETS FOR: 7-1/2" SPACING – 12 TOOTH
8" SPACING – 13 TOOTH
9" SPACING – 15 TOOTH
10" SPACING – 17 TOOTH
12" SPACING – 20 TOOTH
3) THIS RATE CHART SHOULD ONLY BE TAKEN AS A GUIDE FOR FINDING THE APPROXIMATE SPROCKET. RATE WILL VARY WITH DIFFERENT MATERIAL DENSITIES AND SEED SIZES. SEE PROCEDURE DESCRIBED IN THE OPERATORS MANUAL TO OBTAIN A PRECISE RATE.
4) THIS RATE CHART IS NOT INDICATIVE OF THE MAXIMUM AMOUNT OF PRODUCT THAT CAN BE APPLIED. CAPACITY WILL VARY WITH GROUND SPEED AND CULTIVATOR WIDTH.
5) METER SHAFT SPROCKET — QUICK CHANGE SPROCKETS
25 TOOTH – 45 TOOTH MAX. 12 TOOTH MIN.
40 TOOTH – 26 TOOTH MAX. 12 TOOTH MIN.
35 TOOTH – 33 TOOTH MAX. 12 TOOTH MIN.
15 TOOTH – 45 TOOTH MAX. 18 TOOTH MIN.

Rate Charts - Continued

Seed Rate Chart

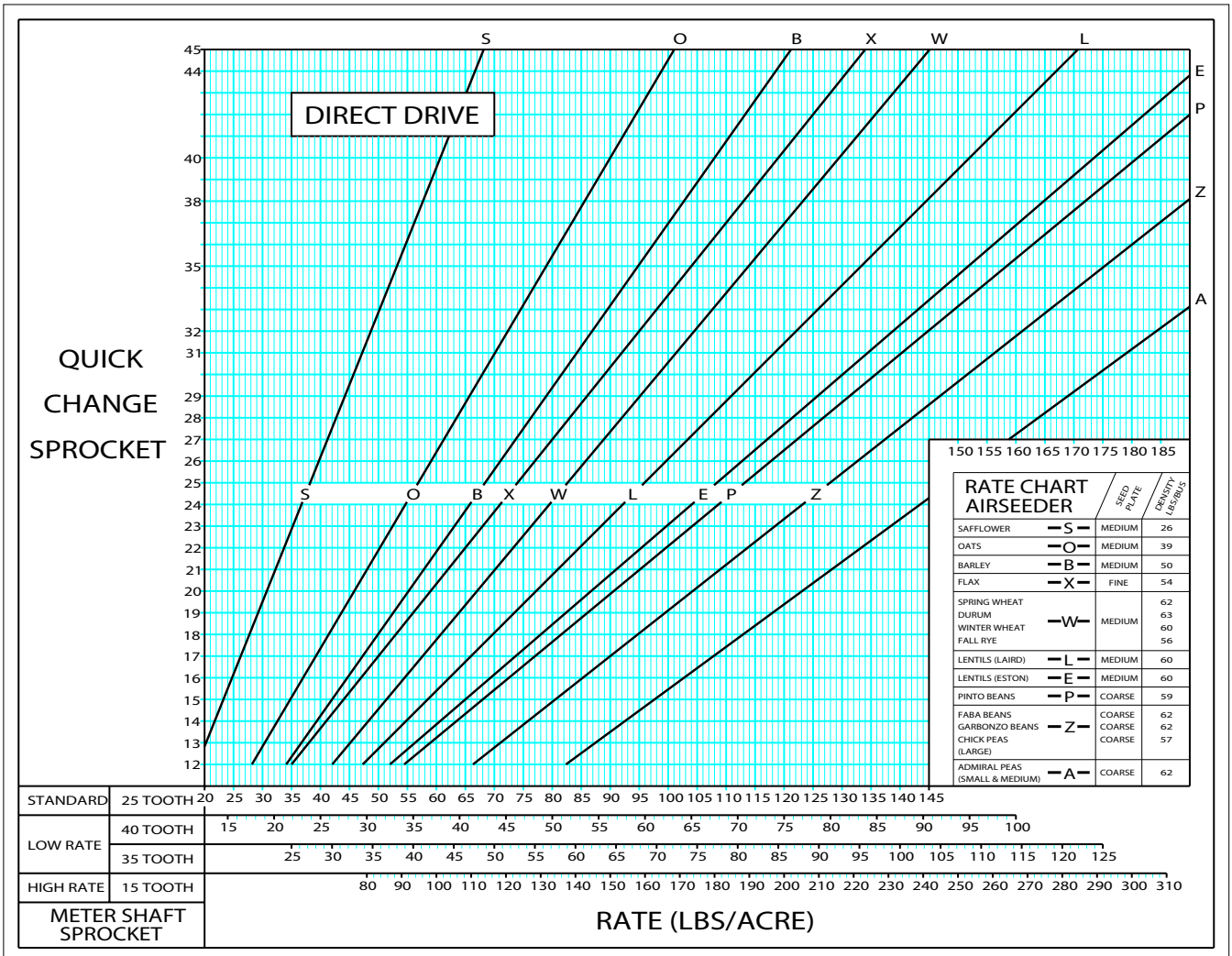

NOTE:
1) RATE CHART APPLIES T0 7-1/2", 8", 9", 10" & 12" SPACINGS.
2) CLUTCH OUTPUT SPROCKETS FOR: 7-1/2" SPACING – 12 TOOTH
8" SPACING – 13 TOOTH
9" SPACING – 15 TOOTH
10" SPACING – 17 TOOTH
12" SPACING – 20 TOOTH
3) THIS RATE CHART SHOULD ONLY BE TAKEN AS A GUIDE FOR FINDING THE APPROXIMATE SPROCKET. RATE WILL VARY WITH DIFFERENT MATERIAL DENSITIES AND SEED SIZES. SEE PROCEDURE DESCRIBED IN THE OPERATORS MANUAL TO OBTAIN A PRECISE RATE.
4) THIS RATE CHART IS NOT INDICATIVE OF THE MAXIMUM AMOUNT OF PRODUCT THAT CAN BE APPLIED. CAPACITY WILL VARY WITH GROUND SPEED AND CULTIVATOR WIDTH.
5) METER SHAFT SPROCKET – QUICK CHANGE SPROCKETS
25 TOOTH – 45 TOOTH MAX. 12 TOOTH MIN.
40 TOOTH – 26 TOOTH MAX. 12 TOOTH MIN.
35 TOOTH – 33 TOOTH MAX. 12 TOOTH MIN.
15 TOOTH – 45 TOOTH MAX. 18 TOOTH MIN.

N36022

Rate Charts - Continued

Slow Speed Seed Rate Chart

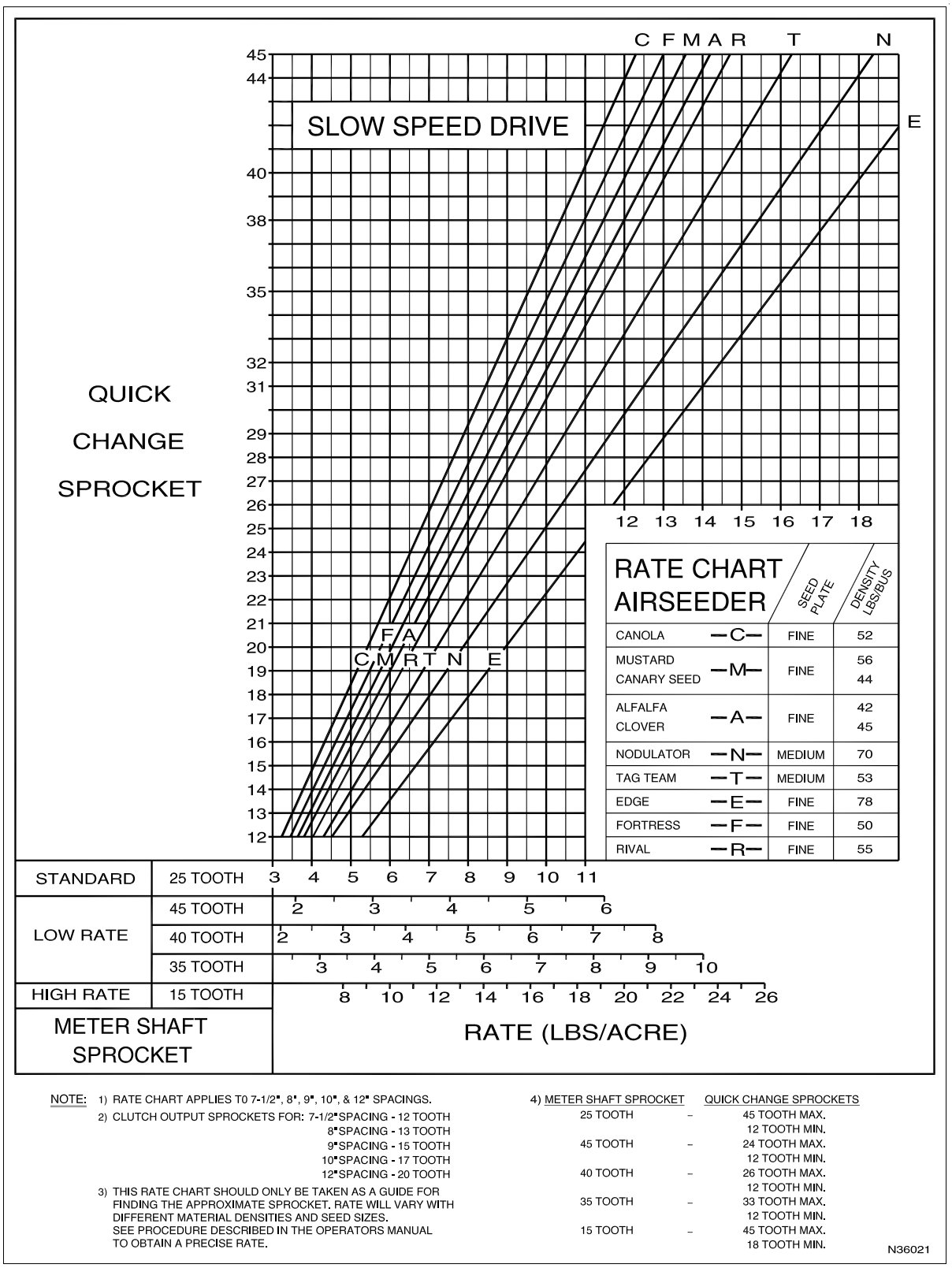

NOTE:
1) RATE CHART APPLIES T0 7-1/2", 8", 9", 10", & 12" SPACINGS.
2) CLUTCH OUTPUT SPROCKETS FOR: 7-1/2"SPACING - 12 TOOTH
8"SPACING - 13 TOOTH
9"SPACING - 15 TOOTH
10"SPACING - 17 TOOTH
12"SPACING - 20 TOOTH
3) THIS RATE CHART SHOULD ONLY BE TAKEN AS A GUIDE FOR FINDING THE APPROXIMATE SPROCKET. RATE WILL VARY WITH DIFFERENT MATERIAL DENSITIES AND SEED SIZES. SEE PROCEDURE DESCRIBED IN THE OPERATORS MANUAL TO OBTAIN A PRECISE RATE.

4)

METER SHAFT SPROCKET		QUICK CHANGE SPROCKETS
25 TOOTH	–	45 TOOTH MAX. 12 TOOTH MIN.
45 TOOTH	–	24 TOOTH MAX. 12 TOOTH MIN.
40 TOOTH	–	26 TOOTH MAX. 12 TOOTH MIN.
35 TOOTH	–	33 TOOTH MAX. 12 TOOTH MIN.
15 TOOTH	–	45 TOOTH MAX. 18 TOOTH MIN.

N36021

Rate Calibration

The practice of doing a rate calibration is strongly recommended as it will confirm the **actual** amounts of product being put into the ground.

Checking the rate on the 9s Series Air Cart is very simple.

- Ensure Fan is not running.
- Ensure correct seed plates are installed.
- Set Flapper Valves to **"Calibration"**as per the decal located on the front of the Collector.
- Remove the wing nuts on the collector bottom.
- Remove the bottom of the collector.
- Remove the metering chain from the transmission that is **not** being checked.
- Check that the desired rate change sprocket is installed in the transmission.
- Hook the Rate Calibration Insert on collector bottom and rotate up into postion. Secure in place with slide lock.
- Turn the crank until material begins to fall through the collector body.
- Slide rate check box on the collector body.
- Turn the crank in direction of the arrow (Counter Clockwise) the required number of turns.

  25 ft - 1/10th hectare Calibration - 23.48 Cranks
  - 1/10th acre Calibration - 9.5 Cranks

  31 ft - 1/10th hectare Calibration - 19.15 Cranks
  - 1/10th acre Calibration - 7.75 Cranks

Note: Incorrect rates will occur if crank is rotated clockwise or not turned precisely the correct number of turns.

Note: The fan must not be running when a rate check is performed.

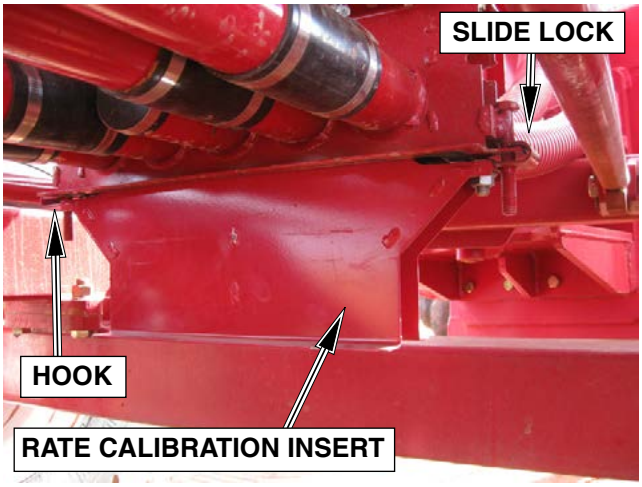

Calibration Insert

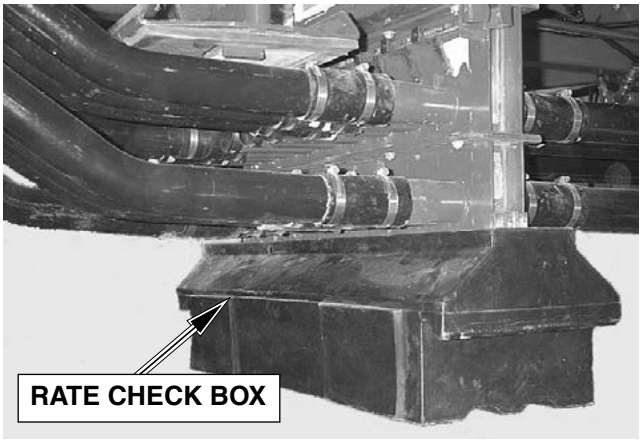

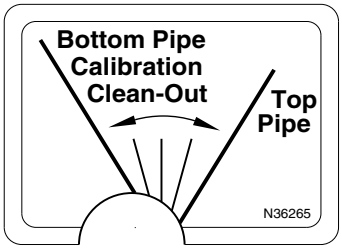

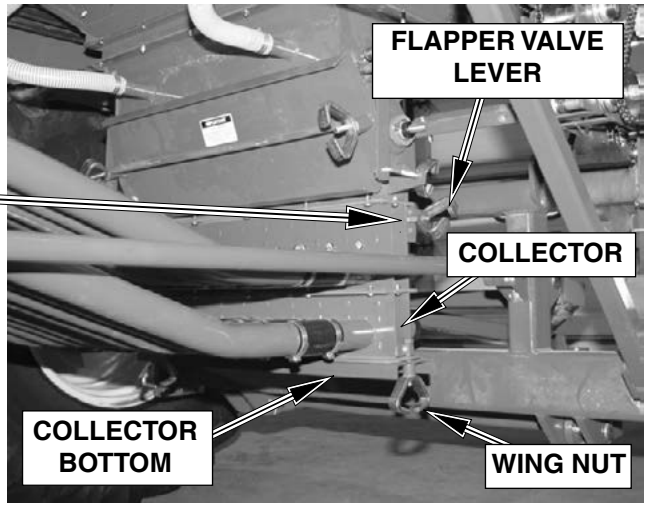

Double Shoot Shown

Important

Flapper Valves must be set to "CALIBRATION"

Rate Calibration - Continued

- Weigh the sample by using tarp straps to hook rate check box to spring scale.

Note: Remember to subtract the weight of the rate check box from the total sample weight.

- Check this rate against rate required.

  For 1/10 hectare sample:
  Rate = kg/ha = Sample Weight (kg) x 10

  For 1/10 acre sample:
  Rate = lbs/acre = Sample Weight (lbs) x 10

- If a different rate is required then increase or decrease the size of the rate change sprocket. Increasing the sprocket size will increase the rate and vice versa.
- Replace the bottom of the collector.

Note: Arrow directions on the collector bottom must point in the same direction as the ones on the collector body.

- Follow the above procedure to check the rate of the other tanks.

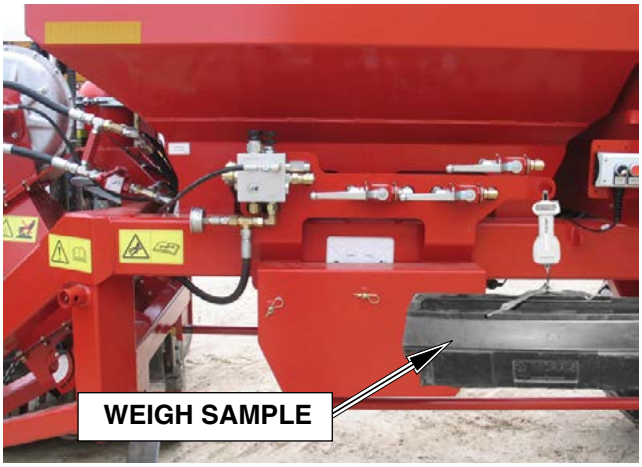

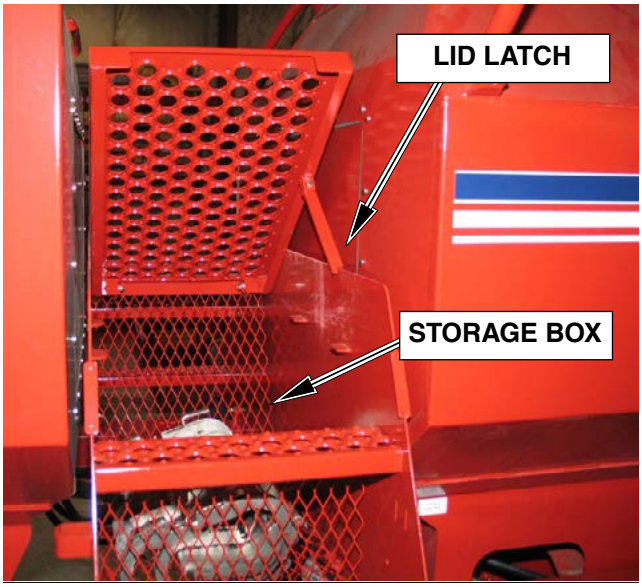

Walkway Storage

Note: Only the two tank version has storage under walkway.

Important

Proper measurement of sample weight is critical for application rate accuracy.

Prime metering wheels before taking actual sample.

Remember to subtract the weight of the rate check box from the total sample weight.

Seeding Fine Seeds (Canola, Mustard, etc.)

When seeding fine seeds such as canola or mustard, the slow speed transmission has to be engaged to ensure the low rates required for these products.

The slow speed transmission is incorporated in **All** the Posi-Drive Transmissions.

- To engage the slow speed, remove the large hairpin from the front shaft and install through the sleeve and shaft located at the rear of the transmission.

Note: Shaft will have to be rotated to align holes for pin insertion.

- To disengage the slow speed, reverse the above procedure.
- Rate checks can be performed the same way as for other seeds.
- Usually it is necessary to reduce the fan rpm when seeding fine seeds. See *"Fan Speed"* for specific fan speeds.

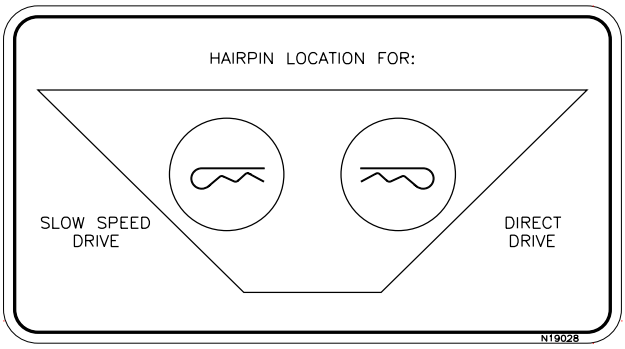

N19028 - Slow Speed

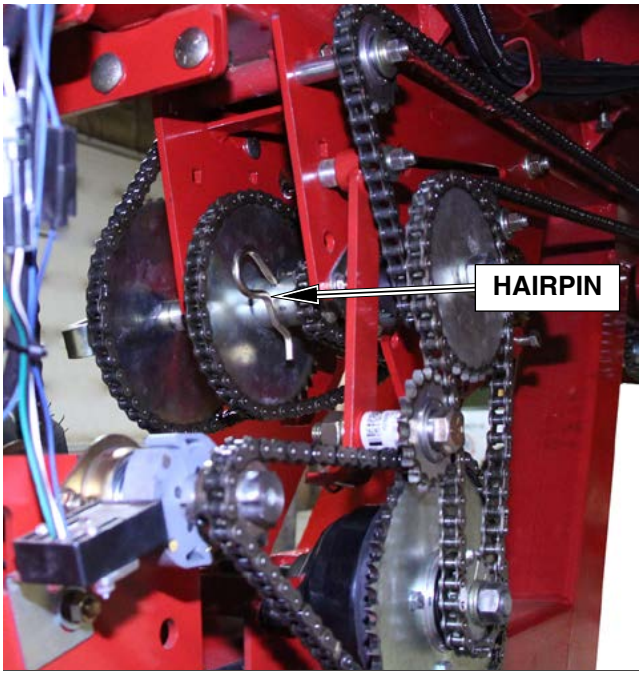

Rear Transmission Shown

Applying Inoculant

When inoculant is applied at the time of seeding, once the air cart has been filled, the fill-lids should be left open and the fan run for 5-10 minutes at full rpm to dry the seed.

Calibration must be done after the seed is dried, otherwise the calibration will be incorrect.

Note: If the seed is not dried then the seed will have a tendency to bridge and not meter into the air stream.

Hydraulic Fan Drive

The piston type orbit motor on the fan requires tractor to have either a load sensing hydraulic system or a closed center hydraulic system with flow control.

The flow required is 18 U.S. gpm (68 liters) for the 12 cc motor at a pressure of 2,750 p.s.i. (18,960 kPa) However, smaller flows can be used depending on the product being metered.

For correct operation of the fan the hydraulic motor must be coupled to the priority valve (if tractor is so equipped) in the hydraulic valve bank.

Check with the tractor manual or manufacturer to determine if or which spool is a *"priority valve"*.

Speed fluctuations will result if the fan is not connected to the priority valve if hydraulic system is equipped with a priority valve.

Ensure couplers are free of dirt and are clean when connecting the fan hydraulics to the tractor.

Fan speed is adjusted by increasing the amount of oil being delivered to the motor by adjusting the respective flow control valve until the desired rpm is displayed on the monitor.

Note: There is a one-way check valve installed in the hydraulic circuit. If the fan does not rotate, then move hydraulic lever in the opposite direction; this will engage the fan. This valve prevents damage to the hydraulic systems when the fan is shut OFF, by allowing the fan to freewheel.

A piston motor creates leakage past the internal components for lubrication. This oil needs to go back to the oil reservoir at the lowest pressure possible. The motor has a 3/8" diameter case drain line. This line must be connected directly into the tractor hydraulic reservoir to ensure that there is zero back pressure in the drain line; otherwise damage will result to the motor.

Hydraulic Drive

IMPORTANT

Run hydraulic fan drive at lowest rpm possible (1,000-2,000) for 5-10 minutes before operating at set rpm. This is required to warm up the hydraulic fluid. Cold hydraulic fluid will cause pressure spikes in the system that will damage the case drain seal in the orbit motor.

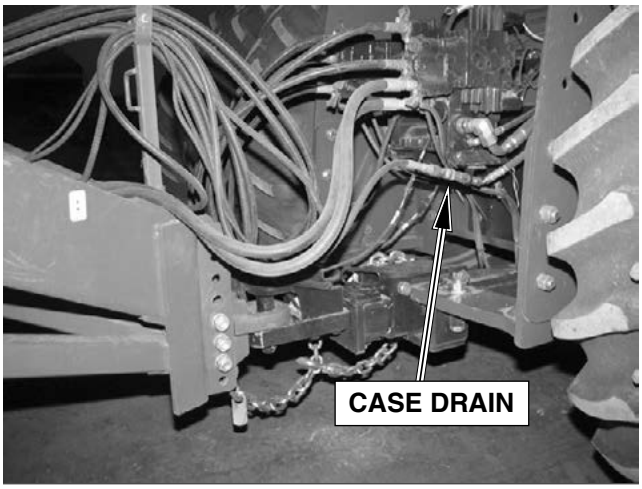

Hydraulic Coupling on Tractor

Fan Speed Recommendations

Adequate air volume is necessary at all times to carry the product in the air stream. Air volume can be controlled by adjusting hydraulic oil flow on hydraulic fan drives or adjusting engine speed on engine fan drive models.

Air volume; hence fan speed requirements will vary with:

1. Ground speed
2. Metering rate
3. Number of primary runs
4. Width of machine
5. Density and size of material

Excessive fan speed can cause seed damage, seed bouncing and premature wear of the system.

Generally fan speed is adequate if product flows through the hoses without surging and the hoses empty quickly and evenly when the system shuts down.

The chart below list *suggested fan speeds* for various application rates.

Note: The charts should be used only as a guide. If plugging or surging occurs increase the fan speed to eliminate the problem.

Note: It is recommended that after a rain or dew the fan be run two to three minutes to expel any moisture in the system.

Important

Keep fan impeller blades clean at all times.

Note: Once fan speed is properly set, be sure to adjust the monitor fan alarm setting accordingly. See Monitor Section "Monitor Programming".

13 inch Diameter Impeller Suggested Fan RPM @ 5 mph		
Combined Application Rate	**Fan Speed Setting**	
	Single Shoot	**Double Shoot**
3 - 50 lbs/acre 3 - 56 kg/ha	3500 - 3750 RPM	3400 - 3650 RPM
50 - 100 lbs/acre 56 112 kg/ha	3750 - 4000 RPM	3650 - 3900 RPM
100 - 150 lbs/acre 112 - 168 kg/ha	4000 - 4250 RPM	3900 - 4150 RPM
150 - 200 lbs/acre 168 - 224 kg/ha	4250 - 4500 RPM	4150 - 4400 RPM
200 - 250 lbs/acre 224 - 280 kg/ha	4500 - 4750 RPM	4400 - 4650 RPM
250 - 300 lbs/acre 280 - 336 kg/ha	4750 - 5000 RPM	4650 - 4900 RPM
300 - 350 lbs/acre 336 - 392 kg/ha	5000 - 5250 RPM	4900 - 5150 RPM
> 350 lbs/acre > 392 kg/ha	5250 - 5500 RPM	5150 - 5400 RPM
Note:	**Fan Speeds given are when applying product. It is normal for fan speed to drop when not applying product.**	

Double Shoot Settings

Plenum Damper Settings

Adequate air volume is necessary at all times to carry the product in the air stream. Air volume can be controlled by adjusting the plenum damper settings.

The table below lists initial plenum damper settings for certain products.

Note: The settings in the table should be used only as a guide.

- If **fertilizer** plugging or surging occurs **decrease** the seed damper setting to eliminate the problem.
- If **seed** plugging or surging occurs **increase** the seed damper setting to eliminate the problem.

Set Plenum Damper so that setting is in the middle of slot.
This Damper is set at the 2 position.

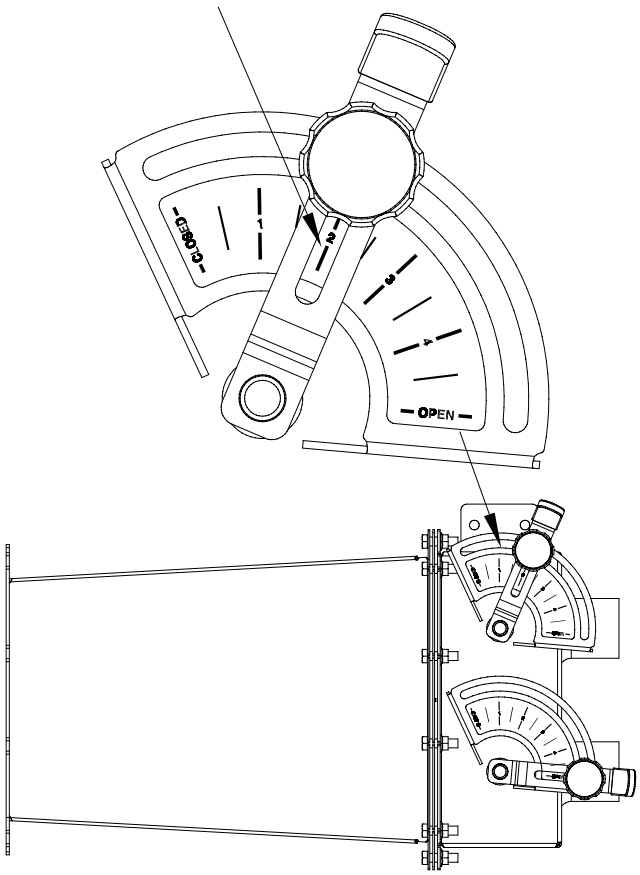

Suggested Plenum Settings				
Product	**Seed**		**Fertilizer**	
	Rate lb/acre	**Damper Setting**	**Rate lb/acre**	**Damper Setting**
Fine Seeds	All Rates	1	All Rates	Open
Coarse Grains	90 lb (100 kg/ha)	Open	50 lb (56 kg/ha)	2
	90 lb (100 kg/ha)	4	100 lb (112 kg/ha)	Open
	90 lb (100 kg/ha)	3	150 + lb (168 kg/ha)	Open
Large Seeds	180 lb (200 kg/ha)	Open	40 lb (45 kg/ha)	2
Single Shoot	**Lower Pipes**	- Top Damper Closed - Bottom Damper Open		
	Upper Pipes	- Top Damper Open - Bottom Damper Closed		

Note: See "Fan Speeds" for Fan RPM.

Double Shoot Settings - Continued

Collector Valve Settings

Located in each upper collector body are flapper valves for machines equipped with Double or Triple Shoot. The flapper valve must be properly set in order for product to flow correctly.

See illustrations on following pages for specific settings for various combinations for Triple, Double and Single Shoot set ups.

Flapper valves must be cycled daily to free valves of any fertilizer and grain dust accumulations.

Whenever valves are cycled or reset to a new position the position should be visually inspected as follows:

- Set flapper valves to correct position for product delivery.
- Remove the inspection door and visually check that the flappers are fully over and touching the side walls, sealing off the individual air streams.
- The flappers can be adjusted by loosening the individual adjusting setscrews and applying pressure to the flapper forcing it against the side wall while tightening the setscrew.

Note: The bottom airstream should be used to carry the higher rate of product.

Flapper Valve Run Test

Use the following procedure to check that the flapper valves do not move when air pressure is applied to under side of flappers.

- Check flapper valves in both directions with air running.
  - If valve is set to direct product into the bottom pipe, have the plenum damper open for the top pipes and closed to the bottom pipes.
  - If valve is set to direct product into the top pipe, have the plenum damper open for the bottom pipes and closed to the top pipes.
- **Always wear** safety goggles, breathing apparatus and gloves when working with granular chemical or treated seed per the manufacture's instructions.
- With fan running check flapper valve position.
- The flappers can be adjusted by loosening the individual adjusting setscrews and applying pressure to the flapper forcing it against the side wall while tightening the setscrew.

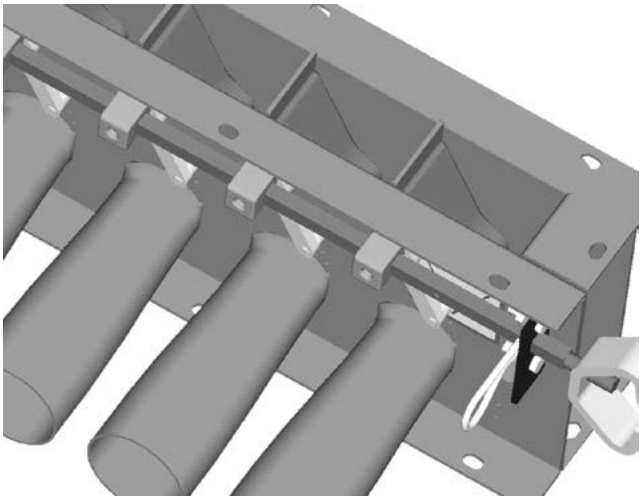

Flapper in "Bottom Pipe" Setting

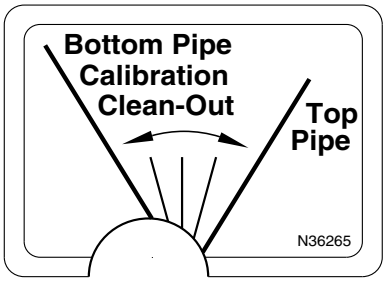

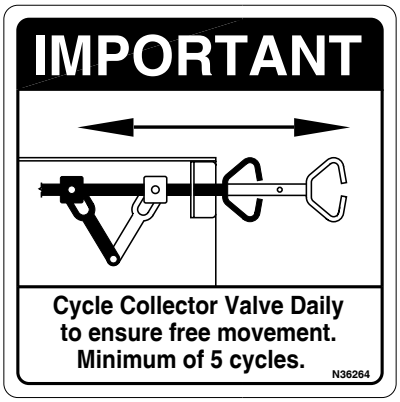

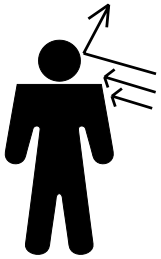

Caution

Care should be taken when working near the air cart while the fan is running. Product blowing out of the system could cause personal injury.

Opener Operation

Accumulator System Operation and Pre-Charge Information

- Always turn "Operating" valve out to bleed off/service position and relieve hydraulic pressure from the system before performing maintenance or repairs.

Note: Accumulator can store pressure even when disconnected from tractor.

- The gas bladder in the hydraulic accumulator should be pre-charged with dry nitrogen gas before being mounted on the unit.
- Different accumulator pre-charge pressures will allow for different ranges of trip out force, as shown in the chart.
- Pre-charge pressure should be set for the most common working conditions.
- Lower pre-charge pressures with higher operating pressures will give longer lifting and lowering times.

⚠ Warning

HIGH-PRESSURE FLUID HAZARD

To prevent serious injury or death:

- **Relieve pressure on hydraulic system before servicing or disconnecting hoses.**
- **Wear proper hand and eye protection when searching for leaks. Use wood or cardboard instead of hands.**
- **Keep all components in good repair.**

Accumulator Operating Range		
Nitrogen Pre-charge Pressure	Display Pressure	
	Minimum	Maximum
350 psi (2413 kPa)	450 psi (3102 kPa)	1200 psi (8274 kPa)

* Maximum system hydraulic pressure is 1200 psi or 4 times the pre-charge pressure, whichever is the lower number.

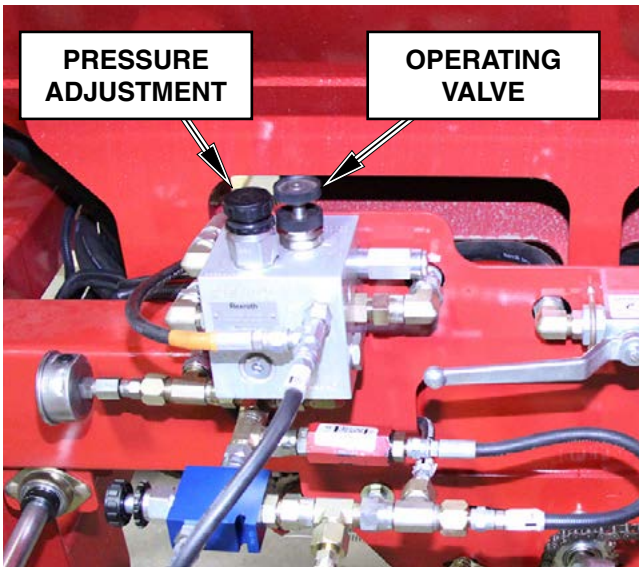

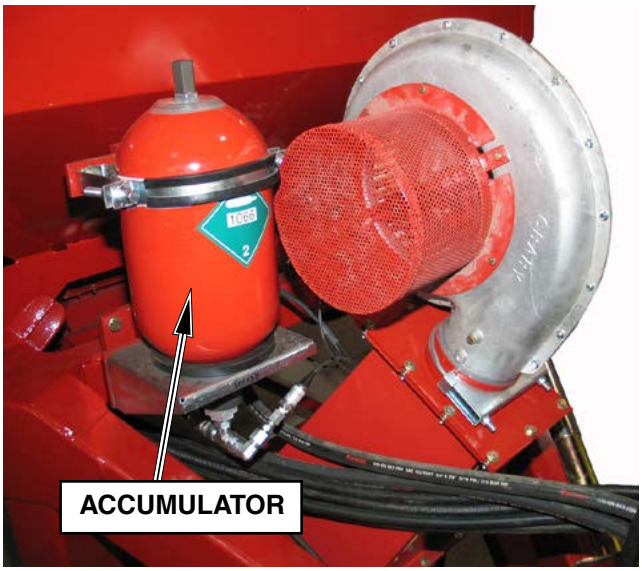

Opener Operation - Continued

Setting Maximum System Pressure (Trip Out Force)

- To determine the approximate trip out force in pounds on each shank, divide the system hydraulic pressure in the circuit by 1.5.

For example: A system hydraulic pressure of 750 psi (5171 kPa) would be approximately 500 lbs (227 Kg) trip force at each shank.

Note: Due to the variation of friction effects, this trip force is approximate.

- Maximum hydraulic operating pressure can be set by dialing the reducing valve in to increase allowable pressure, and dialing it out to decrease allowable pressure. This adjustment is done in order to set a maximum working pressure; pressure can be decreased below the set point and increased back up to the set point on the go from the tractor.

1. Ensure the “Operating” valve is set to operating position and the “Openers” ball valve is set to unlocked position to allow flow.
2. Begin by dialing the adjustment all the way out on the “Pressure” valve.
3. Dial the “Pressure” valve setting in 1 full turn.
4. Operate the tractor remote to pressurize the accumulator circuit. Once the pressure has stopped climbing check the system pressure on the gauge.

Note: Set “Pressure” valve pressure 100 - 150 psi above the desired working pressure in order to allow for pressure drop from accumulator cooling and valve hysteresis. System pressure will level off and hold after approximately 1 minute.

5. If the pressure in the system is high enough to achieve the desired trip out force, setting is complete. If the pressure is too low, relieve the circuit pressure using the tractor remote and repeat steps 3 and 4 until the desired pressure is achieved.
6. If the system pressure is too high, relieve the circuit pressure using the tractor remote, and then dial the “Pressure” valve adjustment out incrementally. Repeat step 4 until the desired system pressure has been reached.

Note: Operate system at the lowest system pressure that will keep shanks locked vertical during seeding and provide adequate packing pressure. Excessive hydraulic pressure may disturb rocks and damage carbides.

Important

Do not exceed 4 times the nitrogen pre-charge pressure or 1200 psi, whichever is the lower number.

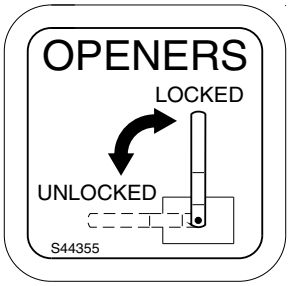

DECAL - S44355

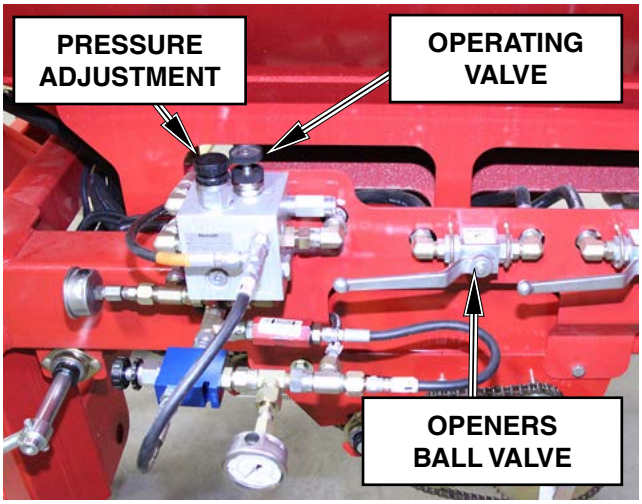

Valve Locations

Opener Operation - Continued

Relieve System Pressure

To bleed all pressure from Opener hydraulic system:

- Open “Operating” valve to service/bleed-off position.
- Lift openers to transport position.
- Put tractor remote in “float” position.
- Let openers drop and pressure go to 0 psi (or near 0 psi) on gauge.
- Lift openers to transport position and lock “Openers” valve.

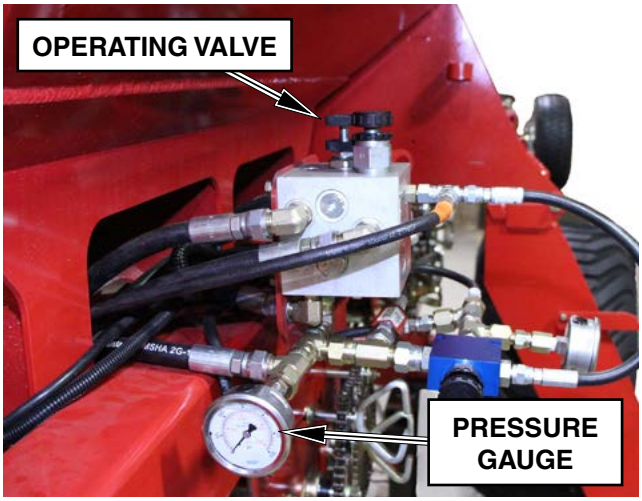

Normal Operation

- Set operating pressure as described under “Setting Maximum System Pressure”.
- Ensure the “Operating” valve is turned in to operating position and the “Openers” ball valve is set to unlocked position to allow oil flow.
- With the Contour Air Drill moving forward, lower openers into the ground. Hold tractor hydraulic lever until the maximum preset operating pressure is reached (see “Setting Maximum System Pressure”). This ensures that all of the openers are fully charged and engaged.
- When turning at head land, the openers do not need to be completely cycled from working to fully lifted position. The openers can be lifted just to the point that they do not contact the ground. This will reduce the time required to fully recharge the hydraulic accumulator to the preset operating pressure.
- Avoid sharp turns with drill in ground. Turns sharp enough to cause the inside openers of the air drill to reverse direction may cause openers to plug.

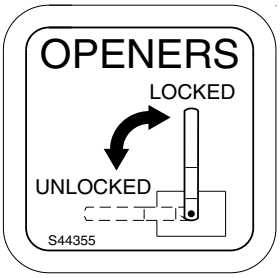

DECAL - S44355

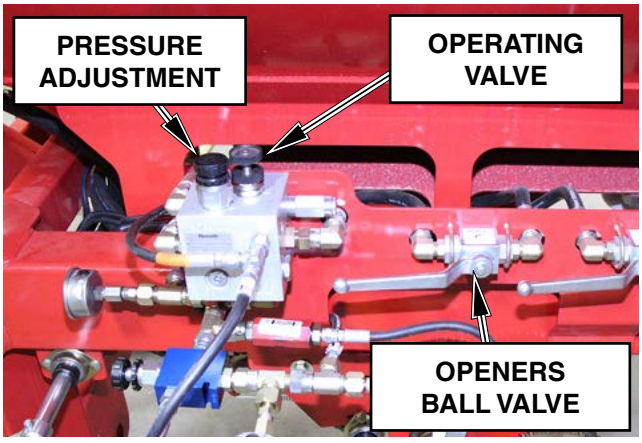

Valve Locations

Note: Under “Normal Operation” the valve block will maintain the set system pressure in the accumulator when openers are raised.

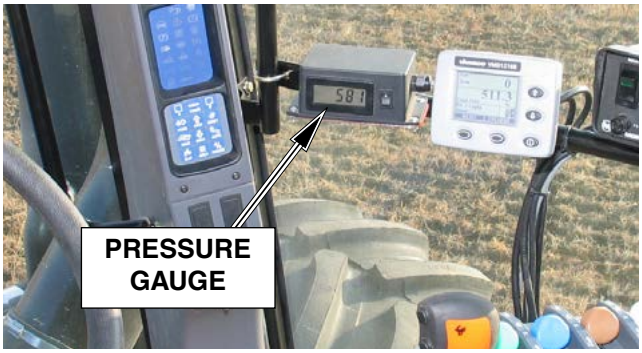

Opener Operation - Continued

Pressure Adjustment (On the go)

Pressure can be changed on the go to adjust for variable field conditions by using the tractor remote.

In order to lower the accumulator pressure on the go, the "Operating" valve must be turned out to the bleed-off/service position.

Note: Operating pressure may drop more than the 100 psi (689 kPa) described under "Setting Maximum System Pressure" when the "Operating" valve is set to the bleed-off/service position. This is dependant on tractor valve leakage.

- Screw "Operating" valve out to open position for "on the go" pressure adjustment.

Operate the openers as usual:

- With the Contour Air Drill moving forward, lower openers into the ground. Hold tractor hydraulic lever until the maximum preset operating pressure is reached (see "Setting Maximum System Pressure"). This ensures that all of the openers are fully charged and engaged.

To reduce operating pressure on the go:

- Place tractor hydraulic lever into "Float Position" until pressure drops to desired operating point.
- Release hydraulic lever once desired pressure is reached.

Note: If pressure drops too rapidly when tractor remote is put into float, the "Operating" valve can be turned in a few turns to reduce bleed-off speed.

To increase operating pressure:

- Operate tractor hydraulic lever to increase pressure to desired operating point.

Important

The "Operating" valve must be set to the "Bleed Off / Service" Position in order to lower accumulator pressure with openers in operating position.

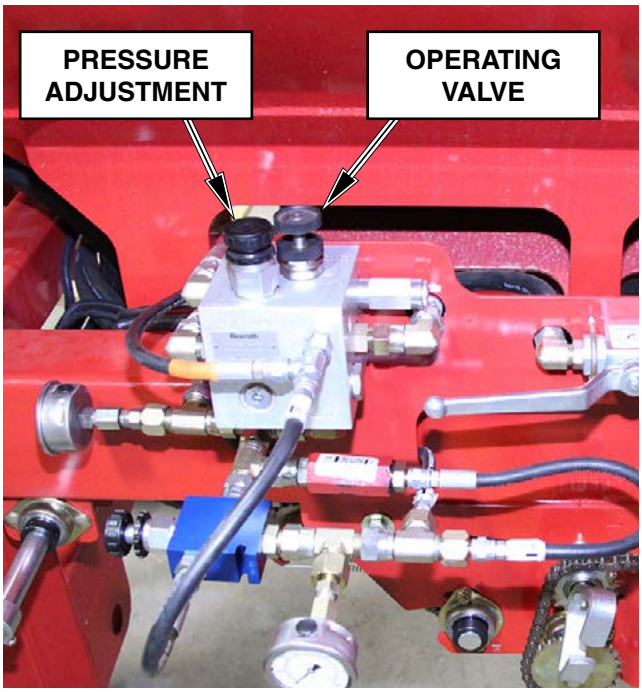

Depth Adjustment

To adjust seed depth:

- Lift openers to raised position (allow pressure gauge to reach zero).
- Shut tractor off and remove key.
- Ensure tractor park brake is engaged before proceeding.
- Place “Openers” ball valve into locked position to prevent accidental oil flow to openers.

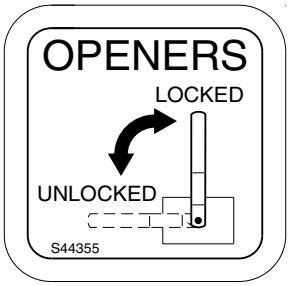

DECAL - S44355

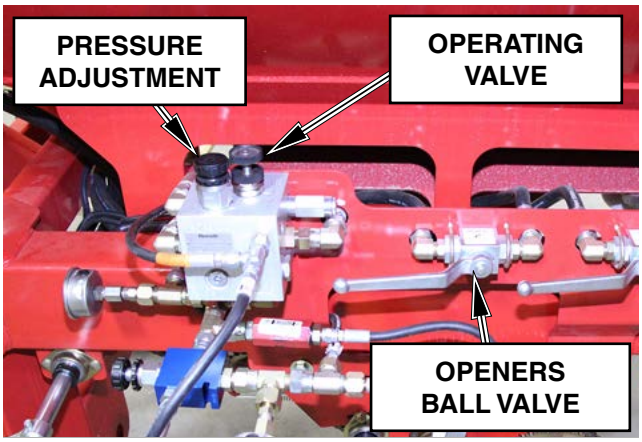

Valve Locations

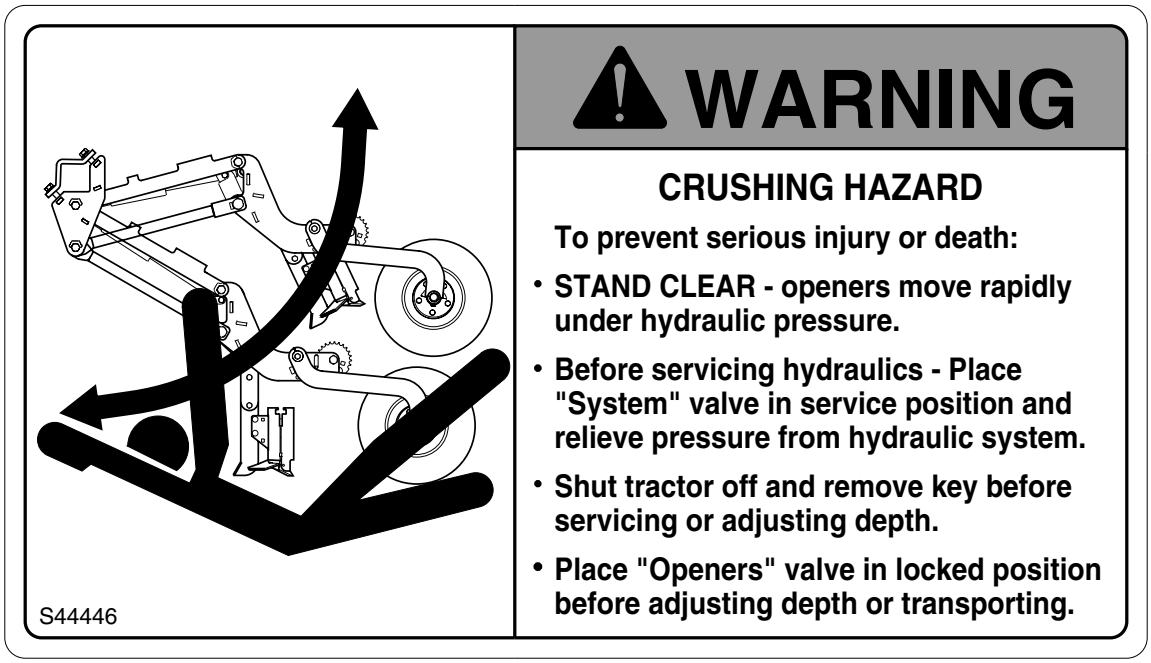

Depth Adjustment - Continued

- Remove lynch pin from 1/2” diameter depth pin.
- Remove depth pin.
- Rotate depth cam to desired lettered setting (“A” is the shallowest postition). Each increment changes the depth a 1/4” (6.4 mm).
- Reinstall 1/2” pin and lynch pin noting letter position before adjusting other openers.

Note: For ease of adjustment, adjust a few openers across the drill to confirm desired seeding depth before adjusting the remaining openers.

- Move the “Openers” ball valve to the unlocked position before using drill.

Important

Pneumatic Tires Only.

Keep opener tires air pressure at the listed specifications to achieve and maintain proper seed depth.

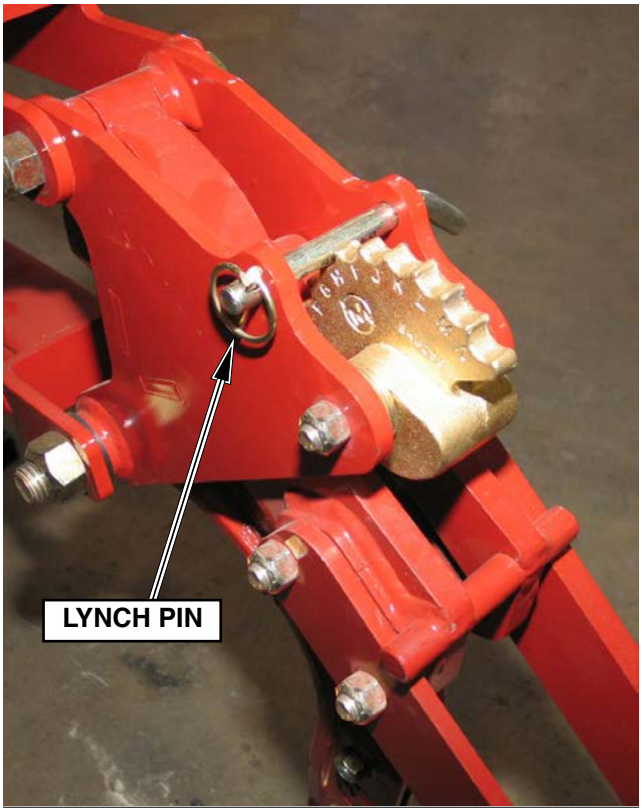

Adjustment Cam

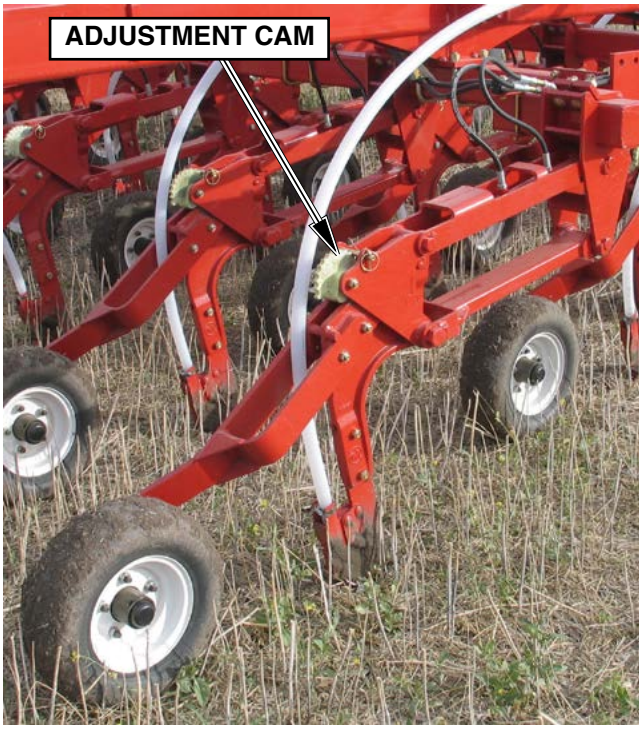

Work Switch

(Optional equipment)

The pressure work switch activates the Air Cart Metering system by the hydraulic pressure on the opener lift side. When the openers are raised the switch opens at a pre-set pressure turning off the Air Cart metering and when lowered the switch closes at the pre-set pressure to turn on the metering.

The pre-set Factory set point meets most operators' preference. If the turn ON and OFF time needs to be adjusted follow the procedure below:

- Remove cover from back of switch.
- Insert a 3/32" allen wrench into the adjustment screw opening. Turn the screw clockwise to increase the set point or counter clockwise to decrease.
  - Increasing set point will cause the metering system to **turn ON quicker**. This will also cause the metering system to turn OFF later.
  - Decreasing set point will cause the metering system to **turn ON later**. This will also cause the metering system to turn OFF quicker.

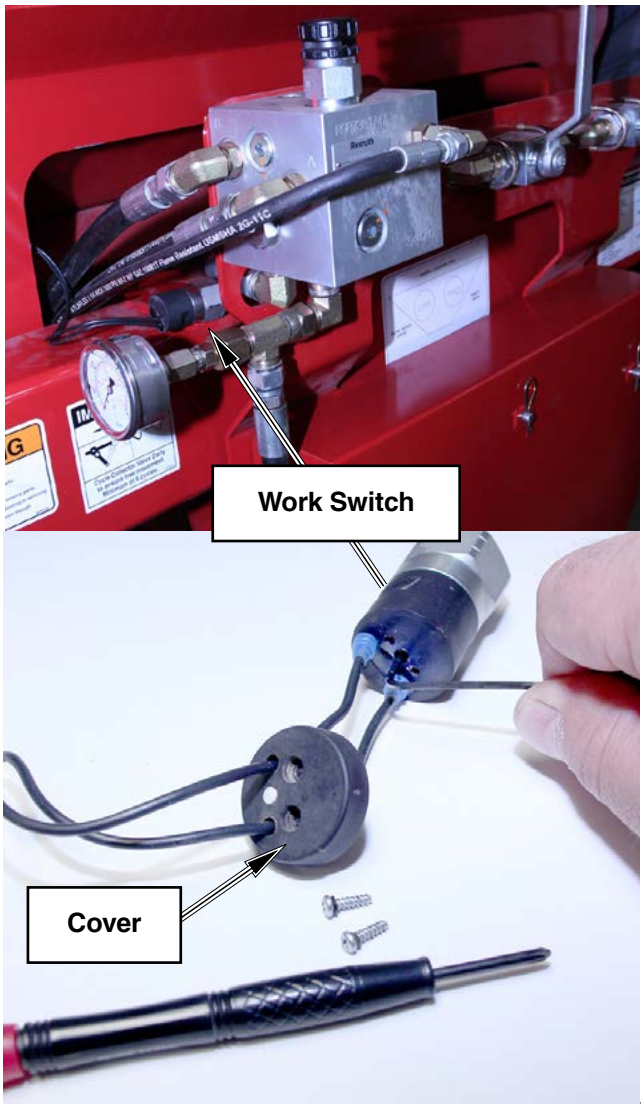

Adjustment Screw

Important

Ensure metering clutch is turned OFF when moving unit to prevent damage to metering wheels in the event pressure switch is in ON position.

Quick Tips

Note: Read the Operator's Manual for detailed operating and adjustment instructions.

Shank Trip Force

Shank trip force (lbs) is calculated by dividing the display pressure by 1.5 (ex. 750 psi display pressure = 500 lbs shank trip force). Shank trip out pressure is generally set at the minimum pressure that keeps the shanks solid in the vertical position and prevents them from repeatedly "tripping out", while still providing adequate packing. Maximum recommended shank trip out pressure is 1200 psi.

Packing Force

Packing force is proportional to shank trip out force and is roughly 1/3 of the shank trip force (ex. 500 lbs shank trip force would give approximately 167 lbs of packing force).

Hydraulic System

The Contour Air Drill uses a passive hydraulic system (no constant flow is needed from the tractor during seeding). Maximum operating pressure is set using the reducing valve on the frame (see "Setting Maximum System Pressure"). Pressure can be changed on the go to adjust for variable field conditions by using the tractor remote (see "Pressure Adjustment"). If full range adjustment of pressure is desired, the reducing valve can be set at its maximum pressure and the operator can then adjust pressure manually by watching the pressure display and opener shanks.

Note: It is normal for the pressure to drop 100 to 150 psi from the initial set point while the accumulator cools (the reducing valve can be set higher to account for this initial pressure drop). If the pressure continues to drop quickly, check the machine for a cylinder, fitting, or hydraulic line leak.

Lifting and Lowering the Openers

The openers do not need to be completely cycled from working to fully lifted position while turning. Openers can be lifted just to the point that they do not contact the ground while turning, in order to save time by not having to fully recharge the hydraulic accumulator with fluid each cycle (the display pressure won't drop all the way to zero). When transporting the drill, lift the openers and ensure that the display pressure goes down to zero.

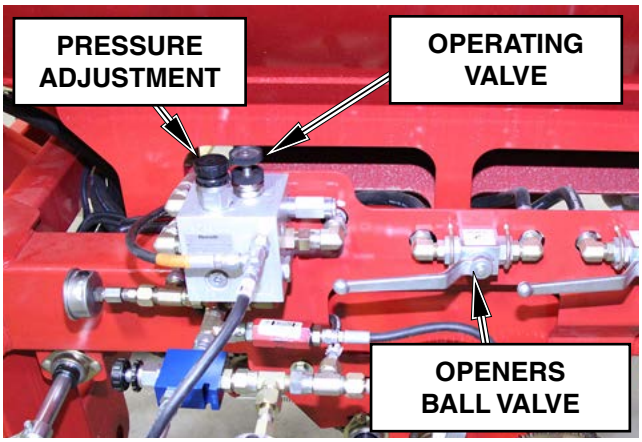

Valve Locations

1200 psi = 18274 kPa

750psi = 5171 kPa

150 psi = 1034 kPa

100 psi = 689,5 kPa

50 psi = 344,7 kPa

500 lbs = 226.8 kg

167 lbs = 75.75 kg

Quick Tips - Continued

Setting the Seed Depth

Seed depth is measured from the packed soil surface to the seed. Set the seed depth on the drill by setting a few openers across the drill to different depths and seeding a test patch. Always seed the test patch at the same ground speed and opener pressure that you intend to maintain during regular seeding conditions. Then check the seed depth of these openers, pick the depth setting that you prefer, and set all openers to the desired letter setting on the depth adjustment cam. The openers perform best while seeding from 1/2" (13mm) to 1-1/2" (38 mm) seed depth, but each customer is responsible for choosing their own depth setting according to their preferences and experience. Each adjustment notch on the adjustment cam is 1/4" (6.4 mm) adjustment. Shallow depth settings can be consistently maintained with the Contour Air Drill system.

Note: Be sure to check tractor and/or air cart tracks to see if the added soil compaction has affected the seed depth; the independent openers can be adjusted separately to compensate for wheel tracks.

Seeding Conditions

The Contour Air Drill is meant to be used as a minimum to no-till seeding system and care should be taken when attempting to seed into loose or pre-worked soil conditions. Shallow seeding depth, reducing operating speed and operating pressure may help reduce soil throw and ridging in soft conditions.

Note: Soil throw onto adjacent seed rows also occurs on conventional air drills with gang style packers, but is less visible because the gang packers pack all rows simultaneously at the back of the drill.

Straw Management

Successful seeding starts at harvest. The height of the straw should not exceed the row spacing of the seeding unit. The combine should chop the straw and spread the straw and chaff evenly across the entire swath width. A heavy harrow may also be required to spread and break down the straw after the field has been harvested. If the straw height does exceed the row spacing a mower should be used to shorten the straw length.

IMPORTANT

The Paired Row Opener with the NH3 adapter is intended to allow the operator the flexibility to switch between granular fertilizer and NH3 without having to change openers. The opener is not intended to apply granular fertilizer and NH3 in the same operation. Excessive gassing off of the NH3 will occur in such an operation. Producers are still able to place starter fertilizer with the seed.

Morris Industries shall have no obligation or liability of any kind on account of the end-user incorrectly using this opener.

Quick Tips - Continued

Air Drill Frame

The Contour Air Drill frame is a simple slab frame system, designed to let the parallel link openers do the work of depth control and leveling during seeding. No leveling of the frame is required. During normal operation of the drill there will be very little weight on the rear tires of the frame. The rear tires may even leave the ground while traveling through sharp gullies; this is normal, and it will not affect the seed depth control of the openers. If the tires are lifted in the air consistently, optional weight kits can be applied to the depth beams near the rear axles.

Weight Kit

Normal Frame Angle

Trouble Shooting Guide

***Note: The "Operating" valve must be turned out to the bleed-off/service position and remove all pressure from hydraulic systems before attempting any service work on hydraulic components.**

Hydraulic system must be bled after it has been serviced (if any portion of the system has been opened to atmosphere). See "Bleeding Hydraulic System" in Maintenance Section.

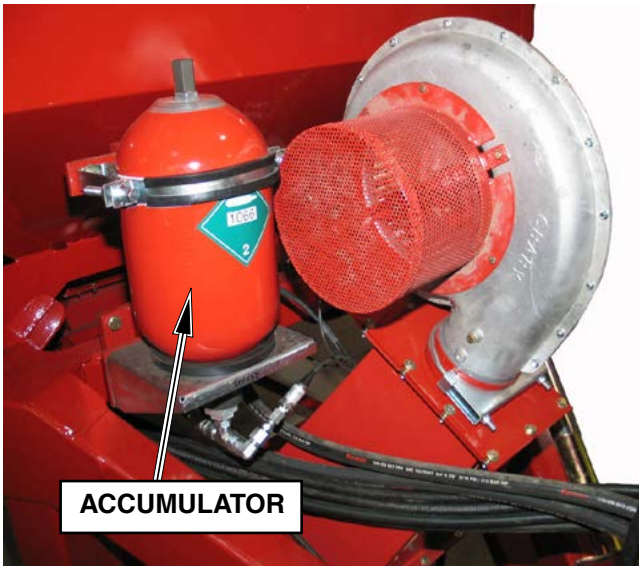

Wing Lift Hydraulics

The wing lift hydraulic system is controlled by a parallel hydraulic system. A pressure compensated Flow Control Valve is used to control the flow of oil to the cylinders allowing both wings to fold and unfold simultaneously. Two hydraulic circuit Shut Off valves are used to lock the hydraulic circuit and prevent any leak back, this ensures the wings remain in transport.

The Flow Control Valve is located on the drill main frame and there are no adjustments associated with the valve.

The Sequence Valves are located in front of the Flow Control Valve. The Top Sequence Valve may require adjustment to have wing lock cylinder close in correct sequence.

The Shut Off valves (Ball Valve) are located on the front left side of the cart frame for easy access.

To unfold the Air Drill, the oil flows to the wing lock cylinder causing it to retract and open the transport lock. The oil flows to the Flow Control Valve, from there to the butt end of all the wing lift cylinders extending the shafts and lowering the wings. All wing lift cylinders must be fully extended to ensure correct operation of the machine.

Placing the unit into transport is the reverse of unfolding the unit. Oil is fed to the shaft end of the wing lift cylinders retracting the cylinders and lifting the wings into transport position. The oil is also fed to the shaft end of the meter drive wheel cylinder raising the meter drive wheel into transport position. Then the sequence valves allow the wing lock cylinder to extend and engage transport lock.

Note: When raising or lowering wings, do so in one continuous motion until fully up or down. Do not stop flow part way allowing wings to fold on their own. This may disrupt the sequence of operation.

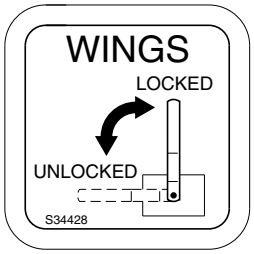

DECAL - S34428

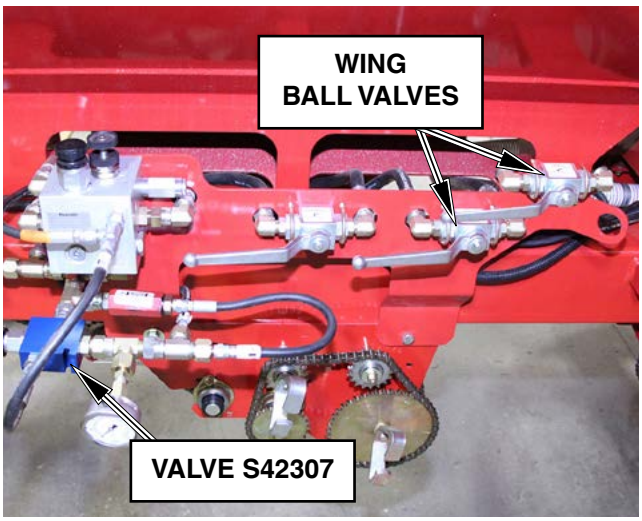

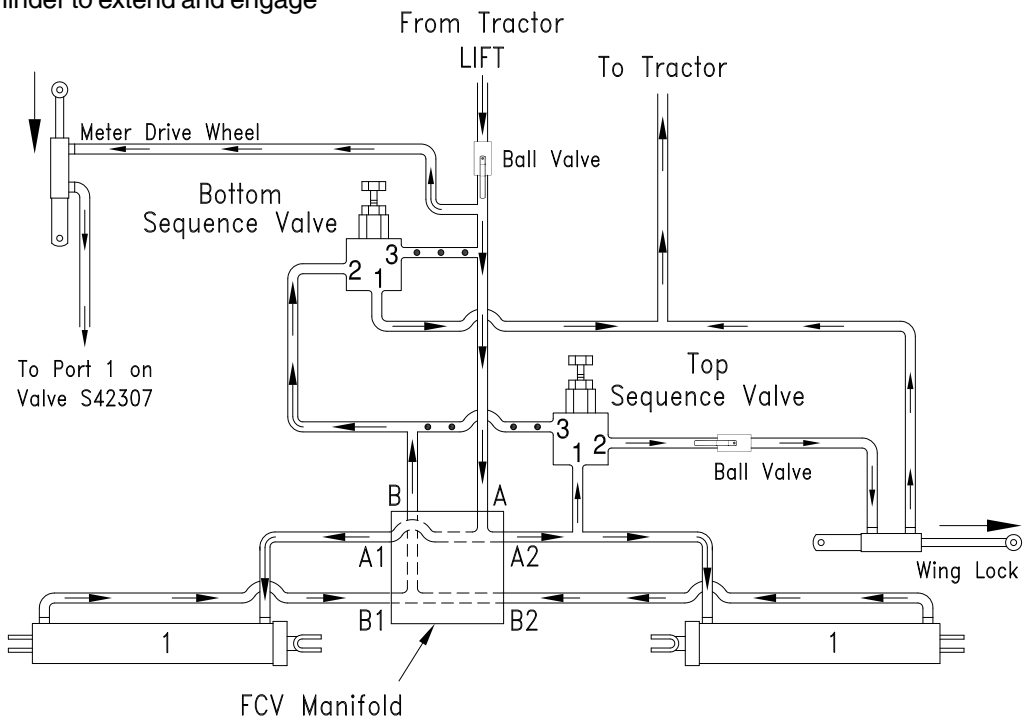

Opener Hydraulics

The contour openers can be operated using two methods as described in the operators manual as Normal Operation and Pressure Adjustment (On the go).

The following is the oil flow for both operating types and can be used for problem diagnosis.

Normal Operation

The opener ball valve is in the unlocked position. This ball valve is open. The operation valve is screwed in fully to the operating position. This needle valve is closed.

To lower the openers, oil flows through the hose to port "A" of valve block. The oil is allowed to flow simultaneously through ports "D" and "F". Port "F" charges up the accumulator to operating pressure set by the pressure valve. Port "D" charges the butt end of the opener cylinders causing the openers to lower.

Once the operating pressure is reached the oil will stop flowing.

From port "A" of valve block, oil flows through the pressure reducing valve, to the pilot operated check valve unseating the check valve and out of Port "D" to the butt end of the opener cylinders causing the openers to lower. Simultaneously, oil flows from the check valve through the directional lock out valve and out of Port "F" to the accumulator.

When all of the opener cylinders are extended to working position, the hydraulic pressure continues to build in the accumulator, hydraulic lines, cylinders and at the reducing valve. When the pressure has risen to what the reducing valve has been set to the reducing valve closes, preventing a further increase in pressure.

When the hydraulic flow to the pilot operated check valve is stopped, the check valve seats, holding the pressure in the opener circuit.

The oil returning from the gland side of the cylinders flows to the opener ball valve into port "E" of the valve block and out of port "B" back to the tractor.

To engage **Meter Drive Wheel** place the wing lift hydraulics into float position. This will allow the oil from the gland side of the Meter Drive Wheel cylinder to flow back to the tractor as the opener hydraulics lower the openers and engage the Meter Drive Wheel. Place wing lift hydraulics into neutral position once Meter Drive Wheel is fully engaged at it's set operating pressure of 300 psi (2068 kPa). The Accumulator pressure will then maintain the pressure on the Meter Drive Wheel during operation.

Note: Opener operating pressure must be greater than the Meter Drive Wheel.

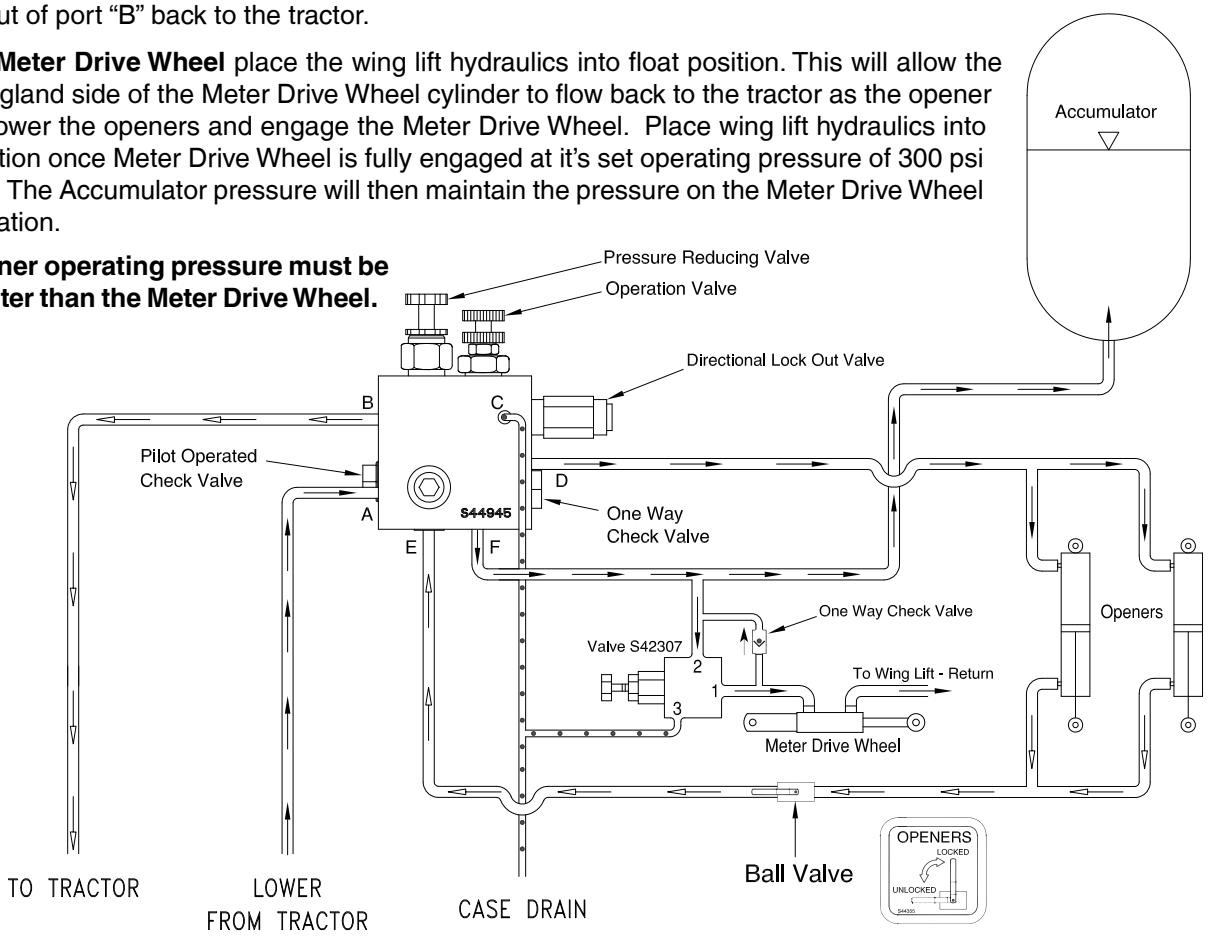

Opener Hydraulics - Continued

Normal Operation - Continued

To raise the openers, oil flows from the tractor hose to port “B” of the valve block and out of port “E” to the opener valve and on to the gland side of the cylinders. Oil is also felt on the line that operates the pilot operated check valve. This causes the check valve to open and allow return oil back to the tractor.

Oil from the butt side of the cylinders travels to port “D” and through the opened pilot operated check valve to the pressure relief valve. Oil can not go through the relief valve in this direction and is directed to the one way check valve. The oil then travels through the one way check valve to port “A” of the valve block.

The oil flows through the port “A” of the valve block and back to the tractor.

Oil is also felt on the line that operates the directional lock out valve. This causes the directional lock out valve to close preventing the oil in the accumulator from returning back to the tractor. The directional lock out valve maintains the pressure in the accumulator in this position. The accumulator pressure will maintain the pressure on the meter drive wheel cylinder keeping drive wheel engaged.

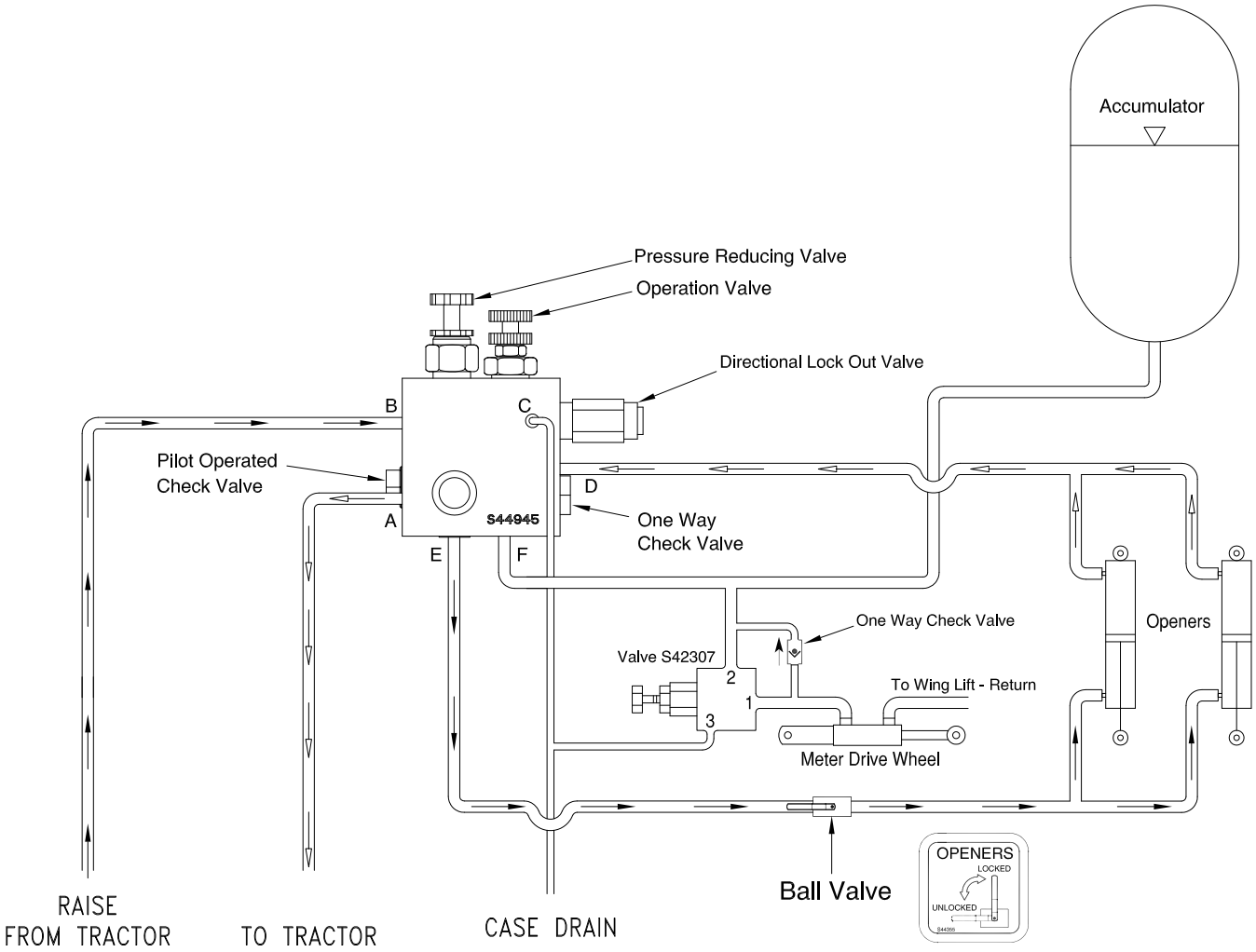

Opener Hydraulics - Continued

Pressure Adjustment (On the Go)

The opener ball valve is in the unlocked position. This ball valve is open. The operation valve is screwed out fully to the service/bleed-off position. This needle valve is open.

To lower the openers, oil flows through the hose to port "A" of valve block. The oil is allowed to flow simultaneously through ports "D" and "F". Port "F" charges up the accumulator to operating pressure set by the pressure valve. Port "D" charges the butt end of the opener cylinders causing the openers to lower.

Once the operating pressure is reached the oil will stop flowing.

From port "A" of valve block, oil flows through the pressure reducing valve, to the pilot operated check valve unseating the check valve and out of Port "D" to the butt end of the opener cylinders causing the openers to lower. Simultaneously, oil flows from the check valve through the directional lock out valve and out of Port "F" to the accumulator.

When all of the opener cylinders are extended to working position, the hydraulic pressure continues to build in the accumulator, hydraulic lines, cylinders and at the reducing valve. When the pressure has risen to what the reducing valve has been set to the reducing valve closes, preventing a further increase in pressure.

When the hydraulic flow to the pilot operated check valve is stopped, the check valve seats, holding the pressure in the opener circuit.

The oil returning from the gland side of the cylinders flows to the opener ball valve into port "E" of the valve block and out of port "B" back to the tractor.

Note: If the tractor valve has leakage the system pressure will continue to drop during operation.

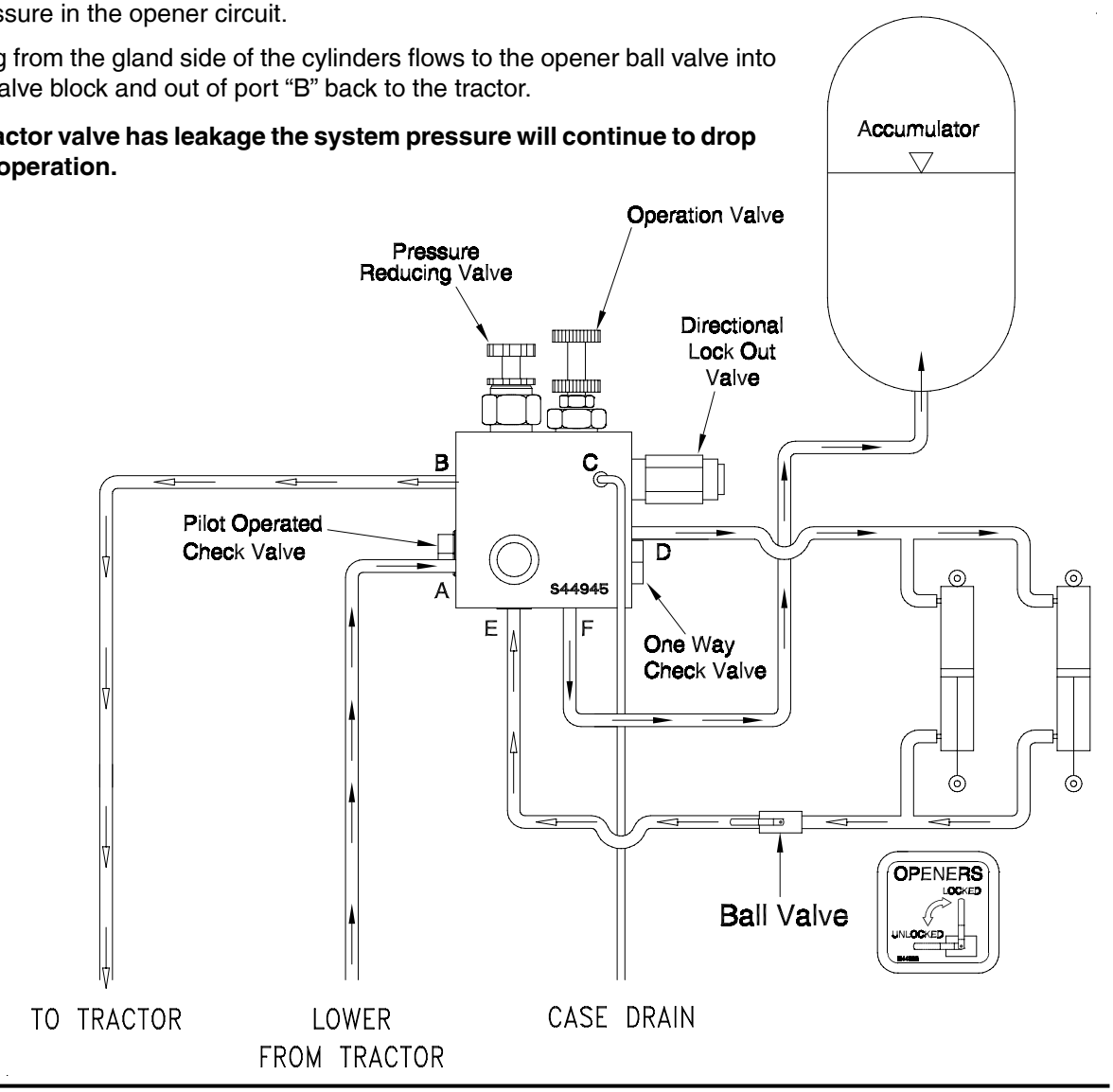

Opener Hydraulics - Continued

Pressure Adjustment (On the Go) - Continued

To raise the openers, oil flows from the tractor hose to port “B” of the valve block and out of port “E” to the opener valve and on to the gland side of the cylinders. Oil is also felt on the line that operates the pilot operated check valve. This causes the check valve to open and allow return oil back to the tractor.

Oil from the butt side of the cylinders travels to port “D” and through the opened pilot operated check valve to the pressure reducing valve. Oil can not go through the reducing valve in this direction and is directed to the one way check valve. The oil then travels through the one way check valve to port “A” of the valve block.

The oil flows through the port “A” of the valve block and back to the tractor.

Oil is also felt on the line that operates the directional lock out valve. This causes the directional lock out valve to close preventing the oil in the accumulator from returning back to the tractor. The directional lock out valve maintains the pressure in the accumulator in this position.

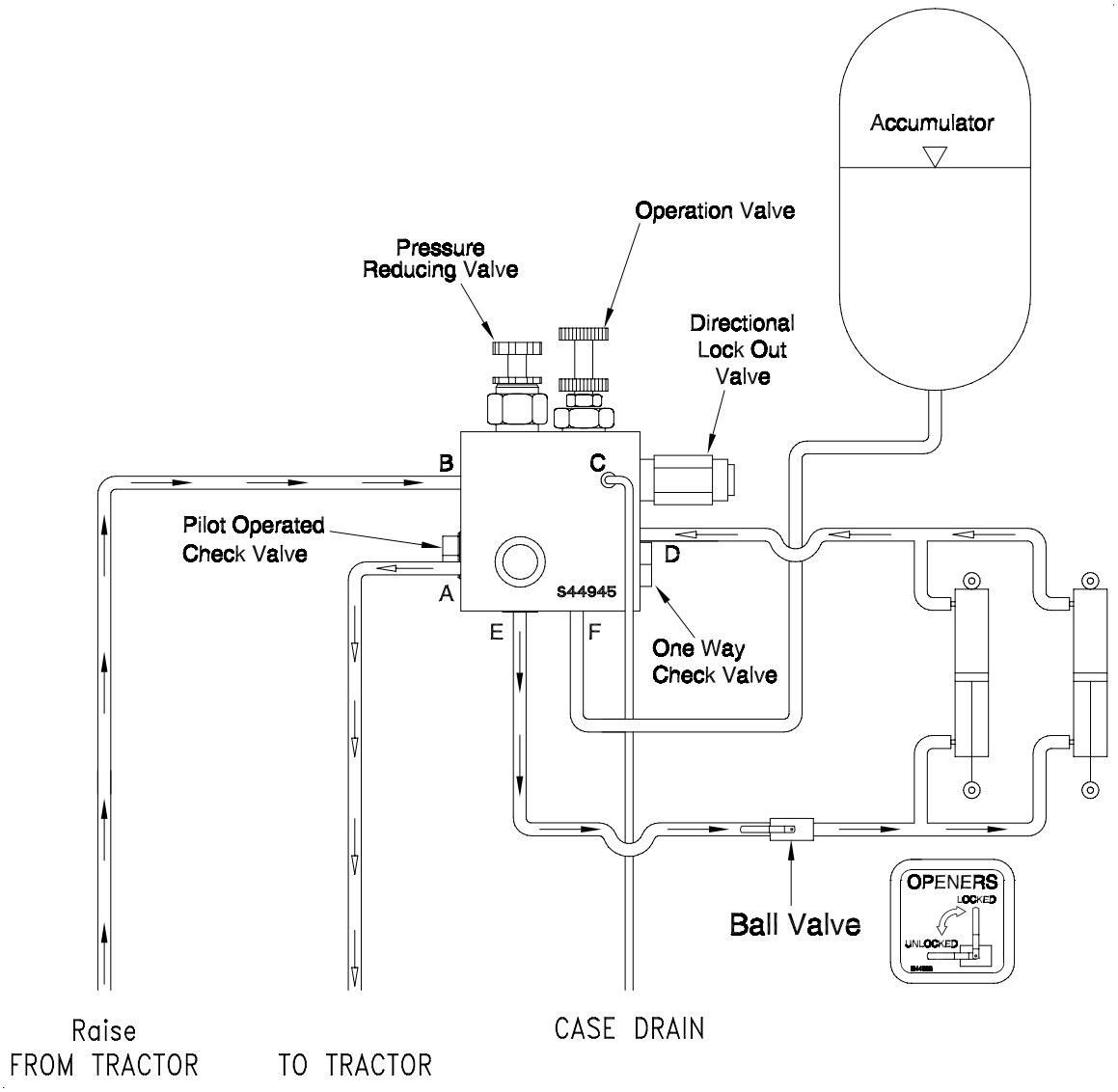

Opener Hydraulics - Continued

Pressure Adjustment (On the Go) - Continued

Pressure adjustment on the go, requires input from the operator to function.

The operator will have selected the operation valve to be in the bleed off/service position.

The adjustable reducing valve (Pressure Valve) will be set to provide correct trip and packing pressure.

With the Contour Air Drill moving forward, lower openers into the ground. Hold tractor hydraulic lever until the maximum preset operating pressure is reached. This ensures that all of the openers are fully charged and engaged. To reduce operating pressure on the go:

- Place tractor hydraulic lever into “Float Position” until pressure drops to desired operating point.
- Release hydraulic lever once desired pressure is reached.

Note: If pressure drops too rapidly when tractor remote is put into float, the “Operating” valve can be turned in a few turns to reduce bleed-off speed.

To increase operating pressure:

- Operate tractor hydraulic lever to increase pressure.

With the tractor lever in the float position the pilot operated check valve does not receive any pilot pressure to open it and the directional lock out valve does not receive any pilot pressure to close it.

The oil flows from the accumulator and the butt end of the opener cylinders through the operation valve and the one way check valve back to the tractor. When the tractor hydraulic lever is released the oil is again trapped and the pressure will be reduced. If the pressure reduction is too great the operator will have to pressure the system up to the desired pressure.

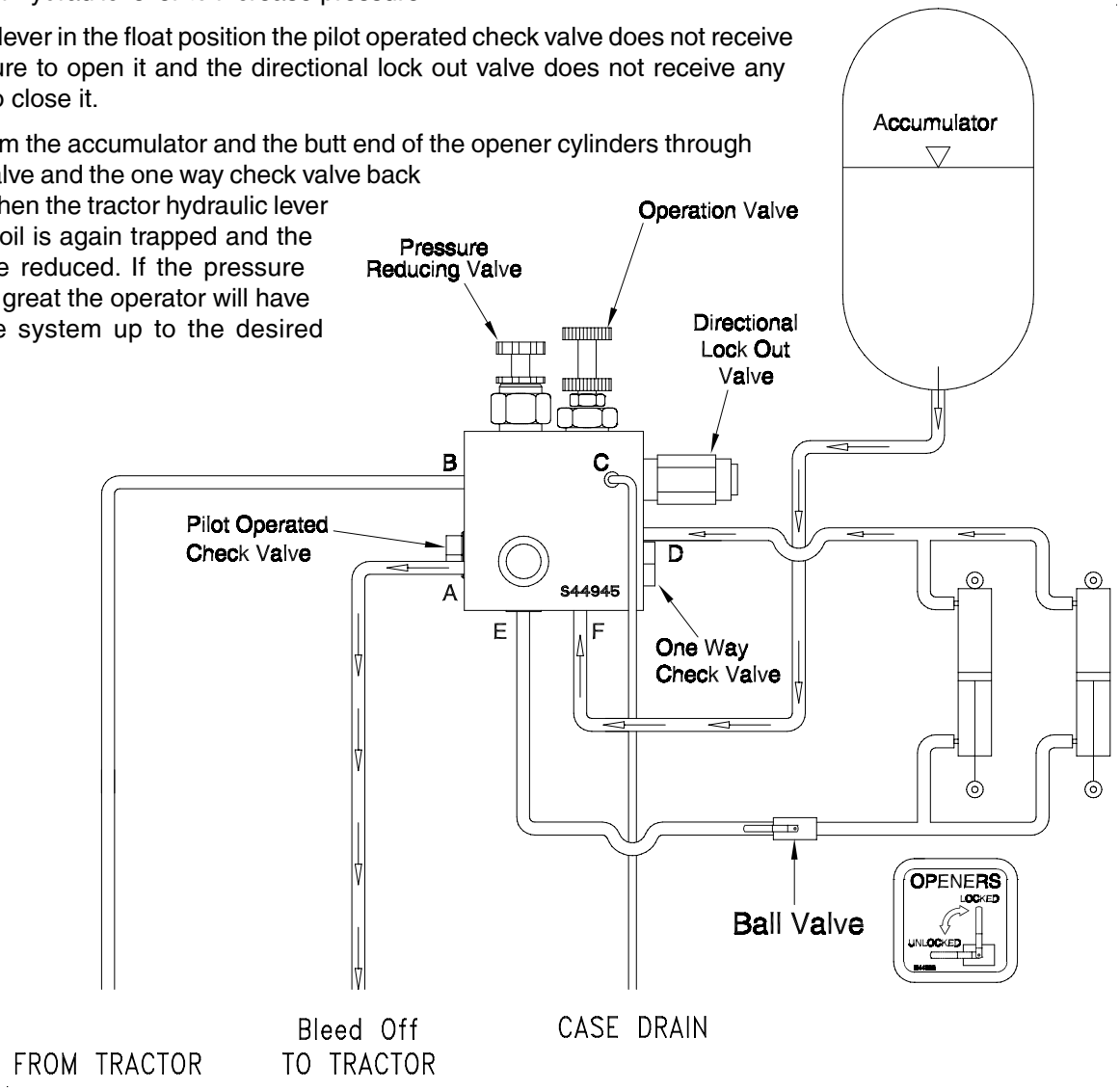

General Guidelines

The results obtained from the Morris Contour Drill are directly related to the depth uniformity of the unit. Worn points, uneven tire pressures, and bent shanks must be avoided to obtain optimum field results.

- Operating depth should be uniform at all opener locations, when spot checking the implement in the field.
- Check openers running in tractor or air cart tracks and adjust depth accordingly.
- Repair or replace bent shanks. Bent shanks cause openers to work at uneven depths and can cause unnecessary ridging. See Maintenance Section.
- Keep tire pressure at the listed specifications to maintain proper level. See Maintenance Section.
- Have Air Drill moving forward before lowering into ground to avoid plugging openers.
- Avoid sharp turns. Turns sharp enough to cause the inside openers of the air drill to reverse direction are not recommended. This may cause the seed openers to plug.

TAKE SAFETY SERIOUSLY.

Do Not Take Needless Chances!

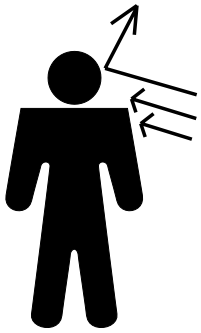

Caution

Care should be taken when working near the air cart while the fan is running. Product blowing out of the system could cause personal injury.

Operating Guidelines - Continued

Turning

- Avoid sharp turns. Backing up of the outer wings with the seeding tool in the ground has a tendency to plug the seed boot with soil.
- Raise seed boots fully before making sharp turns or backing machine.

Seed Rate Settings

- Remove any caked-on material from seed plate and metering wheels.
- Ensure correct seed plate is installed and metershaft turns freely.
- Check product rates carefully by performing a calibration check.

Fertilizer Application

- Avoid using fertilizers that absorb moisture readily, especially during periods of high humidity.
- Also avoid fertilizers that contain a high percentage of fine dust, as these materials can plug metering wheels and coat the inside of seed distribution system.

Fan Setting

- Run fan at recommended speed. If plugging or surging occurs increase the fan speed to eliminate the problem. If plugging or surging continues reduce ground speed to eliminate the problem.
- Allow tractor hydraulic oil to warm-up thoroughly prior to seeding. Cold oil will cause slower fan speeds (Hydraulic driven fan).

Product Application

- Control product application with the clutch switch in tractor.
- Have machine moving forward before lowering seed boots to avoid plugging.
- To prevent skipping, allow a minimum of 15 feet (5 m) of forward travel to ensure air system has delivered product to seed boots.

  Forward travel should be equal to half the width of the seeding tool. [i.e. for a 40 ft (14 m) wide seeding tool the forward travel should be a minimum of 20 feet (7 m).]

Note: It is strongly recommended to consult local agricultural extension offices for allowable product rates, which are dependent on soil moisture and type.

Note: Do not attempt to meter product when fan is not running. Damage to the metering wheels may occur.

Operating Guidelines - Continued

Adjustments and Operational Checks

- When changing fields and periodically throughout the day, the seeding tool should be checked for level and depth and the seed boots for blockage.

Checking Seed Flow

The following procedure should be implemented throughout the day typically at each fill of the air cart:

- Raise the seeding tool out of the ground.
- With the fan running turn the crank on the rear transmission 4 or 5 turns.
- Seed and/or fertilizer should appear at each outlet on the ground.
- If no seed or fertilizer appears on the ground at any of the openers check for hose blockage in both the 15/16" (24 mm) diameter secondary and the 2 1/2" (64 mm) diameter primary hose, as well as in the flat fan divider.
- See Trouble Shooting Section for possible causes of the blockage.

Moisture Alert

- Whenever air cart has been standing for an hour or more during period of high humidity or damp, rainy days, or after sitting overnight, run fan at recommended rpm, with machine stationary for 5 minutes.

Air Leaks

It is imperative that no air leaks occur in the air cart tank as even the smallest air leak from the lid will lead to material bridging in the tank thereby causing misses in the field.

Check the following areas for air leaks:

- Tank clean-out door
- Metering body assembly seals
- Collector assembly seals
- Tank lid

Tank Low in Product

- Refill tank before metering wheels are exposed.
- The metering wheels must be completely covered to avoid unseeded strips.

Important

Check Metering Wheel flutes in the event the primary lines plug.

Flutes may shear if the collector becomes plugged.

Note : Check Seed Flow as described above, after running fan for 5 minutes.

When the slidders are closed product will still be metered until the wheels empty.

Operating Guidelines - Continued

Monitor

- Familiarize yourself with all monitor functions.
- Ensure all monitor *"settings"* are correctly set for the air cart/seeding tool combination.
- Recognize and correct alarm conditions as indicated on the machine.
- Check all wire harness connections for corrosion and use a dielectric spray to clean. Inspect all sensors for proper gap.

MONITOR N44049 Shown

General Field Operation

- Follow guidelines outlined in *"Operating Guidelines".*
- Switch monitor on.
- Start fan.

Note: Load sensing hydraulic systems require *"warming up"* before they function smoothly. See *"Hydraulic Fan Drive" for more details.*

- Move forward with seeding tool.
- Engage metering system clutch (MAIN).
- Lower seeding tool into ground.
- Turning at headland: Switch metering system clutch off (MAIN), immediately raise seeding tool fully rephasing hydraulics (see seeding tool manual).
- Once turned engage metering system clutch (MAIN) and lower seeding tool into ground.

Note: Do not attempt to meter product when fan is not running. Damage to the metering wheels may occur.

Note: It takes a minimum of 15 feet (5 m) of forward travel @ 6 mph (10 kph) before product reaches the seed openers. Forward travel should be equal to half the width of the seeding tool. [i.e. for a 40 ft (14 m) wide seeding tool the forward travel should be a minimum of 20 feet (7 m).]

Clutch Switches

Main

- Controls the main clutch which engages and disengages the ground drive.

Auxiliary

- Controls the optional second clutch.

Granular

- Controls a secondary auxiliary clutch

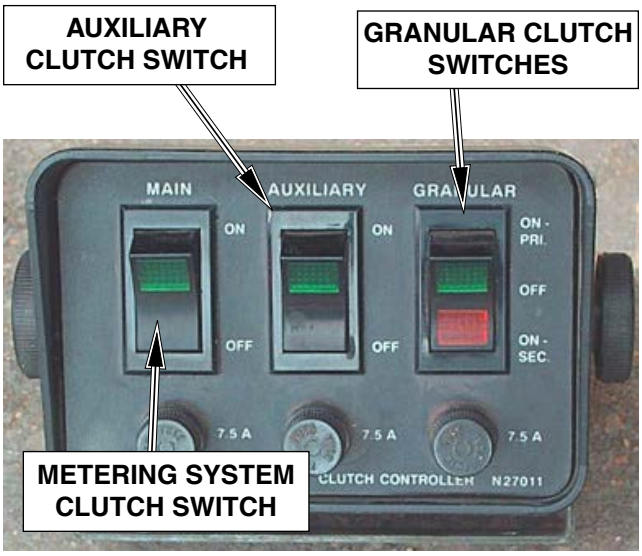

Clutch Switch Console

Notes

Section 6: Monitor

Section Contents

Introduction....6-3
Identifying Monitor Switches....6-4
Identifying Monitor Displays....6-4
Operating Screen....6-5
- Display Section....6-5
- Active Alarm Window....6-5
- Bin Level Icon Window....6-5
- Soft Key Label Windows....6-5
- Navigating the Operating Screen....6-6
- Enlarged Operating Screen....6-7

Installing Monitor....6-8
Startup....6-9
- Power On....6-9
- Power Off....6-9
- Force Language....6-9
- Startup Menu Screen....6-10

Sensor Installation....6-11
- Installation Precautions....6-11
- Installation Procedure....6-12

Monitor Settings....6-14
- Navigating Settings Screens....6-14
- The Menu Title....6-14
- The Body of the Menu....6-14
- The Menu Soft Key Descriptions....6-15
- Changing Monitor Settings....6-16
- Entering the “Settings Menu”....6-16

Settings Menu Chart - Standard Drive....6-17
- Wheel Pulses Per 400 Feet (PP400) Standard Drive....6-18
- PP400 Math Calculation....6-18

Section Contents (Continued)

Speed Calibration....6-19
Alarms....6-20
Introduction....6-20
Nuisance Shaft Alarm....6-20
“In Motion” Notification....6-21
Low Fan Alarms....6-21
Blockage Sensing....6-22
Module Installation....6-22
Runs per Module Setup....6-22
Individual Runs Setup....6-22
Blockage Module Test....6-23
Blockage Calibration....6-24
Optical Blockage Run Bad Alarms....6-25
Blockage Alarms....6-25
Area Display....6-26
Resetting Area....6-26
Sensor Replacement....6-27
Sensor Gap Settings....6-28
Reed Switch Sensors....6-28
Variable Reluctance Sensors....6-28
Trouble Shooting Guide....6-29
Checking Harness....6-29
Checking Sensors....6-29
Checking Blockage System....6-29

Introduction

The monitor utilizes a multiplexed data communication system to monitor the functions of the Air Cart. In the multiplexed system, all sensors communicate with the monitor on the same three wires.

The system can monitor and display status of the following functions:

- Fan speed
- Ground speed
- Shaft speeds (up to 4)
- Bin levels (up to 4)
- Flow Blockage (up to 192 runs)

An audio alarm will sound upon detection of: low or high fan speed, low shaft speed, low bin level and failure of sensors. Also, loss of flow in any runs that are being monitored with Blockage Modules will generate alarms. Audio alarms persist until the alarm condition is removed or until the alarm is acknowledged by the operator by pressing the appropriate soft key.

In addition, the monitor can determine and display:

- Field Area
- Total Area
- Application Rate (weight per unit area) (VRT systems only)

The monitor allows the following settings to be changed:

- High and Low fan speed alarm point
- Low shaft speed alarm point for 4 meter shafts
- Ground speed pulses per 400 ft and pulses per revolution
- Pulses per revolution of fan and 4 meter shafts
- Low bin alarm for 4 bins
- The number of Blockage Modules that are connected to the monitor
- The width of the implement
- Imperial or metric units
- English or Russian language

The settings listed above, as well as field and accumulated areas are stored in nonvolatile memory. This means that the information is retained even when power is disconnected.

Two cables exit the rear of the monitor. There is a two wire power cable that connects to the tractor power supply. The other is a three wire cable that brings power and communications to the remote sensors through the main harness.

MONITOR - N44049

CLUTCH SWITCHES

Identifying Monitor Switches

The five keys on the monitor face are used for controlling the monitor.

Power Key • Used to turn monitor on and off.

Up Key • Used for moving function selection icon. Also used to increment parameter when changing settings.

Down Key • Used for moving function selection. Also used for decrementing parameter when changing settings.

Soft Keys • Used to enter menus and selections. Also used for going to next parameter in program mode.

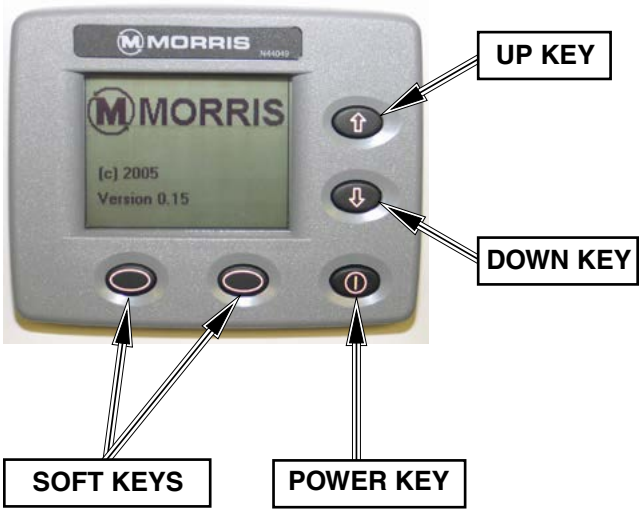

Identifying Monitor Displays

The Operating Screen is divided into the following areas:

- Two small display sections or one enlarged display section
- Active alarm window or, if there are no active alarms, the current ground speed is displayed
- Bin level icon window
- Soft key label windows

ENLARGED DISPLAY SECTION

Pressing soft key under “Smaller” will switch the screen to the 2 - display sections.

TWO – DISPLAY SECTIONS

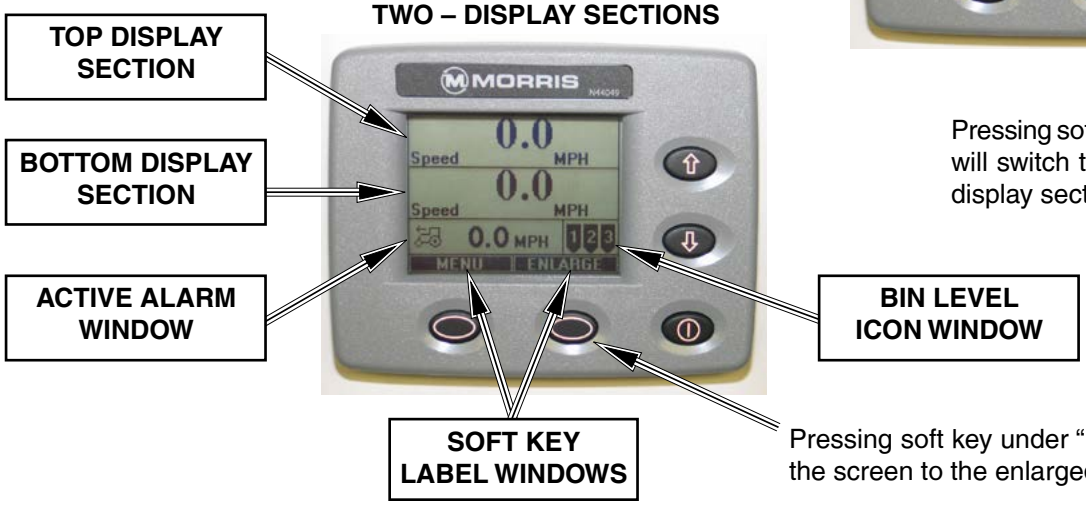

Pressing soft key under “Enlarge” will switch the screen to the enlarged display section.

Operating Screen

Display Section

The display has two Display Sections on the operating screen. These windows have their data periodically refreshed at ½ to 1- second intervals. Each window has the following information in it:

- Display object name (e.g. Shaft)
- Display object instance (e.g. 1), if applicable
- Display object data (e.g. 7)
- Display object units (e.g. RPM), if applicable

Active Alarm Window

All acknowledged alarms are displayed on the operating screen's "active alarm window" until the alarm condition is removed. If there is only one acknowledged alarm, it will flash on the display in order to draw the user's attention to the continued error. If there is more than one acknowledged alarm they will cycle on the display, with each alarm being displayed on the screen for 2 seconds.

Note: If there are no active alarms, the current ground speed is displayed

See "Alarms" for more details on when an alarm is first observed.

Bin Level Icon Window

The display has one window dedicated to graphically showing the status of product in up to 3 bins. When a bin is empty an alarm will be generated and the corresponding bin icon will flash.

Soft Key Label Windows

The display has two windows displaying the current function of the two available soft keys. The function of the soft keys change depending on the screen being viewed. On Operating Screen, MENU can be accessed with left soft key or bottom display ENLARGED.

Note: Monitor will show "communication errors" if the system installation (Sensor Learn Mode) was not completed. *See Sensor Installation.*

Operating Screen

Operating Screen with Alarm

Operating Screen - Continued

Navigating the Operating Screen

When the UP or DOWN key is pressed in the Operating Screen, this allows the user to select what is shown on the Top Display Section and the Bottom Display Section.

Example: Change the top display from Fan to Shaft 2

1. Press the UP key to enter the “Top Display Section”.
2. Use the UP/DOWN keys to scroll to other display items. Press the DOWN key to highlight “Shaft RPM”.
3. Press the SELECT key to enter “Shaft RPM”, which will display the instances of Shaft RPM.
4. Use the UP/DOWN keys to change the selected shaft to 2.
5. Press the SELECT key to choose shaft 2. This will return the monitor to the main screen and the Top Display Section is no longer displaying Fan, but is now displaying Shaft 2 RPM.

Note: If the DOWN key were pressed in step 1 to enter into this mode, the title of the menu would be “Bottom Display Section” and the bottom display would be changed.

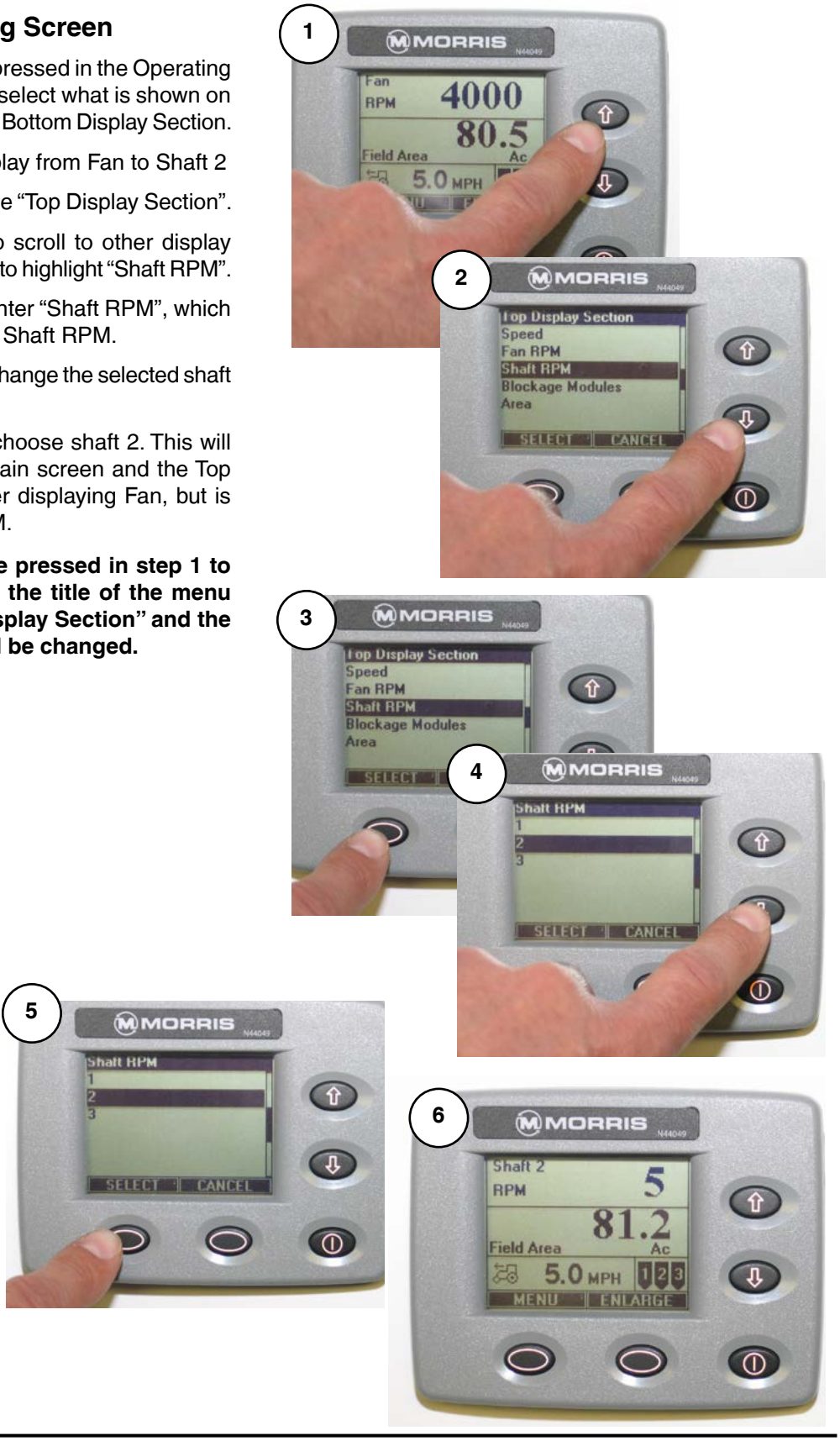

Operating Screen - Continued

Enlarged Operating Screen

If the ENLARGE key is pressed, the Bottom Display Section will expand up into the Top Display Section and the text will increase in size.

When in the enlarged mode, the right most soft key will be re-labeled SMALLER. Press the key, to return to display of top and bottom sections.

In Enlarged mode, the UP and DOWN keys allow changing function displayed on screen.

Press soft key under ENLARGE to enlarge bottom section.

Pressing soft key under SMALLER will switch the screen back to the two - display sections.

Installing Monitor

- Locate monitor and clutch switch in a convenient location in cab.
- Connect power cables directly to a 12V battery.
  - White or Red wires **positive**.
  - Black wires **negative**.
- Route cable harness to seeding tool and Air Cart. Ensure cables clear any pinch points (i.e. tractor articulation point, hitch point, etc.)
- Program monitor as described in *System Installation* and *Monitor Programming* Sections.

Note: Locate monitor, power and ground wires away from radio and antenna if tractor is so equipped.

Note: Do not connect monitor directly to starter switch.

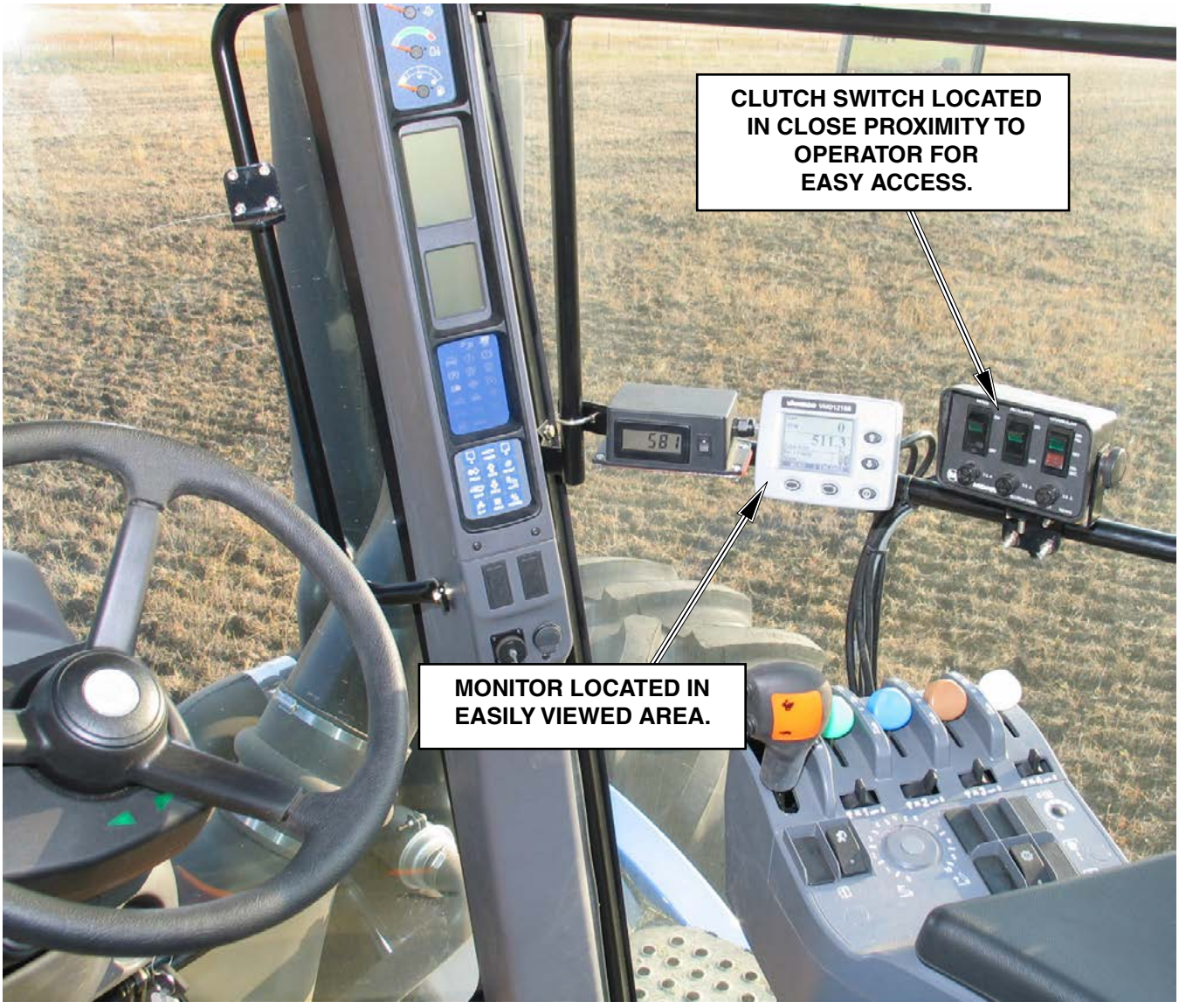

Startup

Power On

Press the Power Key to turn the monitor on.

When the unit is turned on, the following display sequence takes place:

- MORRIS is briefly displayed along with the Version number of the monitor software. **This number should be included with any reports of faulty or unexpected system operation.**

  This Splash Screen is displayed for a short time – long enough to go through the system startup and wakeup all of the sensors (approximately 3 seconds).
- If any sensors are found, the monitor proceeds to the “Operating” screen
- If no sensors are found, the monitor proceeds to the “Installation” Screen.

Monitor ID
Version Number

Splash Screen

Power Off

Press and hold the Power Key for a couple of seconds until the monitor turns off.

Force Language

The user can press and hold the following keys when turning monitor on to force the display to a certain language:

Force English Language

- Press and hold the UP and DOWN keys. Push the power button. Release the UP and DOWN keys after the correct language is shown.

Force Russian Language

- Press and hold Soft key 1 and Soft key 2. Push the power button. Release the UP and DOWN keys after the correct language is shown.

Note: This language setting will not be retained when the monitor is turned off. To retain language setting, go to “Global Settings” and choose “Language” and select “Exit and Save” option.

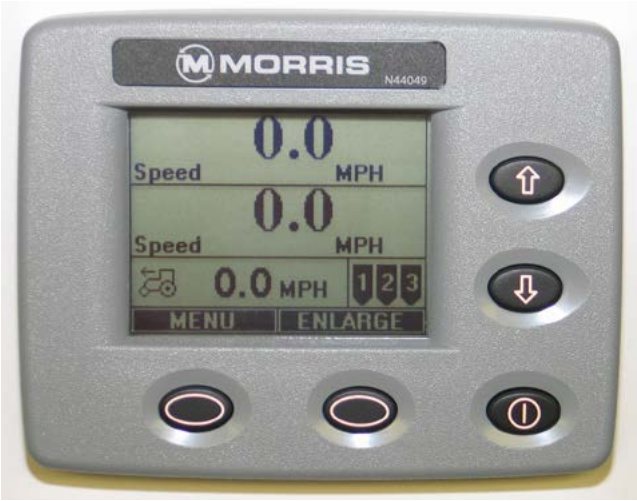

Operating Screen

Startup - Continued

Startup Menu Screen

The startup menu screen provides the user with four different options:

1) **System Startup** – this will not install any sensors.
2) **Learn New System** – this is used to learn a new compliment of sensors, but not modify the menu parameters that have already been customized by the user.
3) **Default Settings** – this is used to restore all of the menu parameters to the factory configuration.
4) **Learn New System and Default Settings** – this performs the actions of number 2 and number 3 above.

System Startup Screen

Sensor Installation

The installation procedure is required to configure the monitor to the sensors attached to it.

The operator may have to redo the installation if:

1) An extra tank is added to the Air Cart.
2) Replacing or adding sensors.
3) Replacing monitor with a new monitor.

Installation Precautions

1) During installation the monitor has a predetermined order in which it wants the sensors attached. The installer must be sure that the proper sensor is plugged in the proper sequence.

   i.e. If during installation the installer plugs in the Front Shaft and Ground Speed sensors in the wrong order, the monitor would not know this. The monitor would interpret Front Shaft rpm from the Ground Speed shaft and vice versa.

2) There may be occasions when the operator will not have use of all the sensors.

   i) During sensor installation when the monitor prompts for an unused sensor to be plugged in, the operator can press the SELECT key to skip over the sensor. **The sensor will be assigned a disabled status.** A sensor disabled by this method can only be enabled by repeating the installation procedure.

   ii) During operation the operator can disable shaft sensors by setting the pulses per revolution to zero. When pulses are set to zero alarms for that sensor and corresponding Bin Level sensor are ignored and no monitoring occurs.

3) Blockage modules attached to the harness are handled differently than the sensors attached to the harness. See Assembly Section *"Blockage Module".*

   Optical Sensors - the blockage modules **have to be unplugged from the harness** before sensor installation can be performed and are connected like the other sensors requested by the monitor during sensor installation.

Note: Each monitor is unique to the sensors installed. If monitor is moved to another Air Cart it has to be reprogrammed to match the sensors.

Sensor Installation Order
Speed (Ground)
Fan 1
Fan 2
Shaft 1
Shaft 2
Shaft 3
Shaft 4
Tank 1
Tank 2
Tank 3
Tank 4
VarCon (Variable Rate) (Unit calls for installation only if var controller is installed)
Optical Blockage Modules

Sensor Installation - Continued

Installation Procedure

1. **Disconnect** all the sensors (3 pin connector) from the harness before turning monitor on.

   Turn monitor on. With no sensors found, the monitor proceeds to the “Startup menu” screen.

   Use the Up/Down keys to select “Learn New System”. Press the soft key below SELECT to enter the “Install New System” mode.

2. The monitor will ask if you want to proceed or exit.

   With “Proceed” highlighted, press the SELECT key to enter the “Install New System” mode.

3. The display will indicate to install the speed sensor indicating that the ground speed sensor may now be connected. Connect the ground speed sensor.

   The monitor will give a double beep when it acknowledges the sensor.

Continued on next page.

1

2

3

Sensor Installation - Continued

Installation Procedure - Continued

4. The display will indicate to install the fan sensor indicating that the fan sensor may now be connected. Connect the fan sensor.

   The process is the same for rest of the sensors in the sequence.

5. When the monitor requests a sensor that **will not be used** in the configuration, use the Up/Down keys to select “Skip this Sensor” and press the soft key below SELECT and the monitor will skip the sensor and advance to the next one in the sequence.

Note: There are **12 Blockage Modules**. To skip past the blockage modules use the Up/Down keys to select “Skip this Type of Sensors” and press the SELECT key, the monitor will skip all of the blockage modules and advance to the next type of sensor in the sequence.

6. When all sensors in the list have either been learned or skipped, the monitor will display “Installation Complete”. Use the Up/Down keys to select “Exit” press the SELECT key to return to the main “Startup Menu”.

   To verify the installation, turn the monitor off, then turn it on again. The monitor will now proceed to the “Operating” screen.

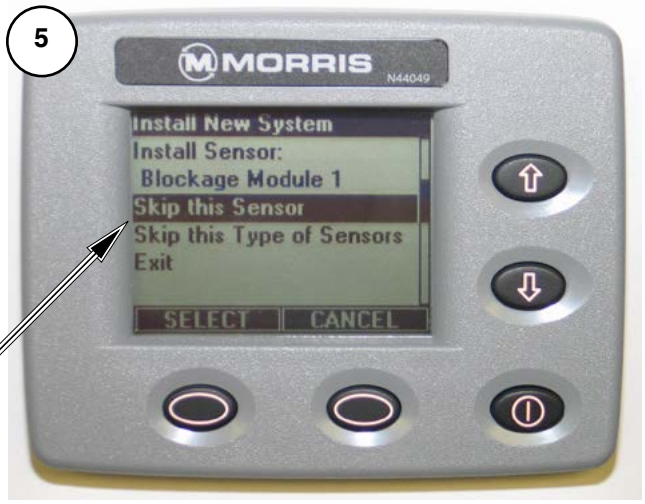

OR

Monitor Settings

Navigating Settings Screens

The settings screens contain all the configuration information required to tailor the monitoring capabilities to the installed system and user preferences. Only setting parameters that are relevant are displayed (i.e. if no Shaft 3 is installed, there will not be any Shaft 3 setting parameters made available).

Pressing the MENU key when in the “Operating Screen” enters this mode.

The menu system is made up of screens that have the following content:

1) A menu title
2) The body of the menu
3) The soft key descriptions - changed to “Select” and “Cancel”.

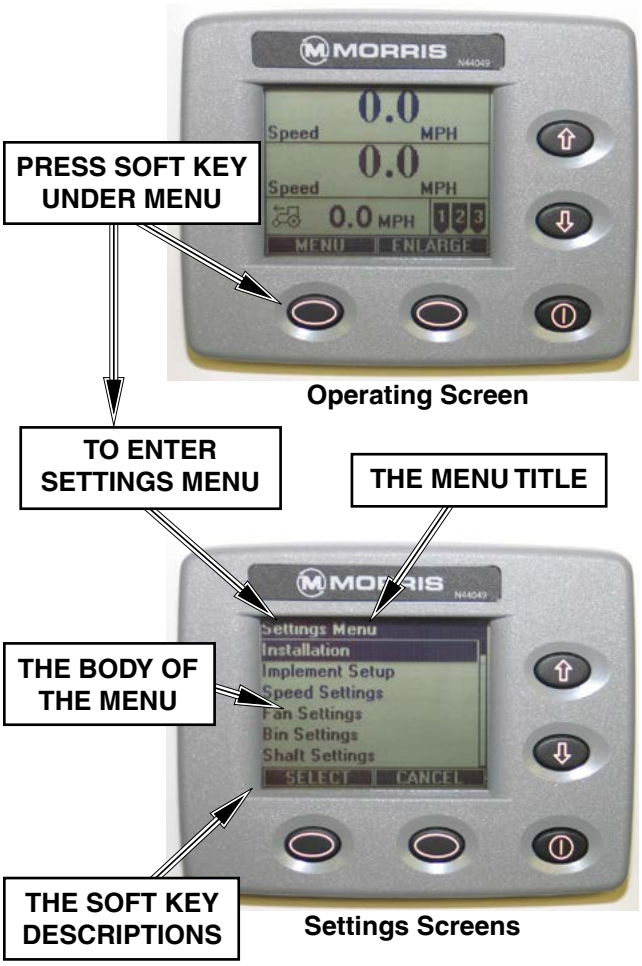

The Menu Title

The menu title is at the very top of the screen.

This indicates to the user what the rest of the screen is referring to. For example, if the user is in the “Speed Settings” menu, the field “Pulses Per Rev” refers to the ground speed sensor and if the user were in the “Seed Shaft Settings” menu, the field “Pulses Per Rev” would refer to the seed shaft speed sensor.

The menu title line is always highlighted so that it stands out from the rest of the screen.

The Body of the Menu

The main body of the menu is a list of objects. The objects in the menu system will take up 1 or more lines of space. The scroll bar on right hand side of screen indicates where the object is in the list and when the list has been wrapped.

When a menu is entered, the top object is always highlighted. The highlighting of the object indicates to the user the current object that they are on.

- If the Select key is pressed, the current object is selected.
- If the Up or Down arrow keys are pressed, the object above or below the current object is highlighted.
- If Cancel is pressed, the menu exits without saving anything and reverts back to the previous menu that was displayed.

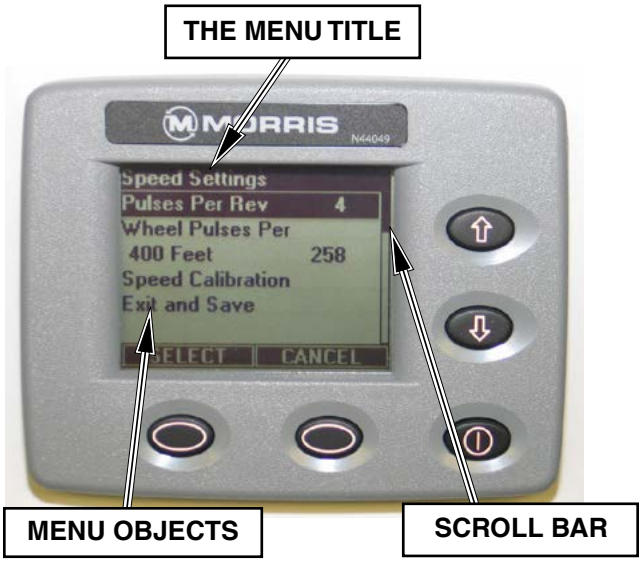

Monitor Settings - Continued

Navigating Settings Screens - Continued

The Body of the Menu - Continued

When an object is selected, the value becomes highlighted.

- Highlighted value can be changed with the Up and Down keys.
- Press “Select” key after changing value to enter value and return to object list.
- Select “Exit and Save” to keep any changes.

There are multiple ways to exit from the menu screens:

1) If the changes that were made on the menu screen need to be saved, the “Exit and Save” menu link must be selected.
2) If the changes are to be discarded or if the current operation is to be terminated (such as a calibration), the “Cancel” key can be pressed, or if it exits, the “Exit” link can be chosen.

The Menu Soft Key Descriptions

Like in the “Operating Screen”, the Menu also has two soft keys. These keys allow the user to select an item or object (the Select key) or to Cancel out of the current operation without saving anything (the Cancel key).

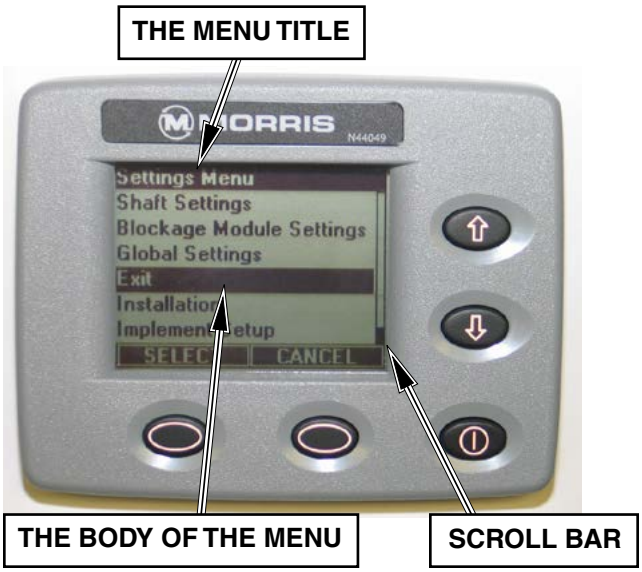

Note: The list shown has been wrapped. The scroll bar indicates that the highlighted Item “Exit” is actually the last item in the list.

Important

The use of “Restore Default Settings” restores ALL of the menu parameters to the factory configuration.

(i.e. Implement width, Pulses Per Rev, Wheel Pulses Per 400 Feet, etc.)

Monitor Settings - Continued

See charts on following pages for monitor settings.

Changing Monitor Settings

The following example explains the procedure for changing settings.

Entering the "Settings Menu"

Example: Change the implement width to 41.5 ft.

1. From the "Operating Screen" press the MENU key to enter the "Settings Menu".

   Use the Up/Down keys to select the desired function. Press the soft key below SELECT to enter the function "Implement Setup".

2. Under each function there is a list of parameters that can be changed, see "Settings Menu" chart.
3. Use the Up/Down keys to select the parameter. "Implement Width".
4. Press the SELECT key to highlight the value. Use the Up/Down keys to change the value to "41.5 Ft".
5. Press the soft key below SELECT to enter the value and move to the next parameter in the list.

   Set all parameters in the list as indicated in the above steps.

6. When all parameters in the list have been set, use the Up/Down keys to highlight "Exit and Save" press the SELECT key to save the changes and return to "Settings Menu".

   Proceed to set all function parameters as indicated in "Settings Menu" chart.

Saved settings are retained even after power has been removed from the monitor.

Note: When the operator is in any of the "Settings Menu" modes, the monitor will not generate normal monitor alarms (i.e. low fan speed, shaft speed and so on).

Settings Menu Chart - Standard Drive

Installation

Install New System	See “Sensor Installation”	
Replace a Sensor	See “Sensor Replacement”	
Add a Sensor	See “Sensor Replacement”	
Remove a Sensor	See “Sensor Replacement”	

Important

Select “Exit and Save” in each Menu Setting to save changes.

Implement Setup

Units	Select Imperial or Metric	
Implement Width	Set to width of seeding tool	
Clear Field Area	See “Resetting Area”	
Clear Total Area	See “Resetting Area”	

Speed Settings

Pulses Per Rev	Set to 4	
Wheel Pulses Per 400 Feet	See PP400 Chart	
Speed Calibration	See “Pulse Counting Mode for PP 400”	

Fan Settings

Pulses Per Rev	Set to 2	
Low Alarm Point	Set to 3000 rpm	
High Alarm Point	Set to 5000 rpm	

Bin Settings

Tank 1, Tank 2 and Tank 3

Alarm Setting	Enabled (default)	Set to Disabled if tank is not in use.

Shaft Settings

Shaft 1, Shaft 2 and Shaft 3

Settings	Pulses Per Rev	Set to 4
	Low Alarm Point	2.0 rpm - Can be adjusted to 0.5 rpm for low rates.

Blockage Module Settings

Runs per Module Setup	Set individual Module number of Runs
Individual Runs Setup	Allows Runs to be Enabled/Disabled
Blockage Module Test	See “Blockage Module Test”
Blockage Calibration	See “Blockage Calibration”

Global Settings

Language	Select English or Russian	
Volume/Pitch	50% (default)	Set as desired.
Backlight	50% (default)	Set as desired.
Contrast	100% (default)	Set as desired.
Restore Default Settings	Resets ALL Monitor Settings to defaults	

Note: Only setting parameters that are relevant are displayed (i.e. if no Shaft 3 is installed, there will not be any Shaft 3 setting parameters made available).

Monitor Settings - Continued

Wheel Pulses Per 400 Feet (PP400) Standard Drive

The chart contains average PP400 values, for the tire options offered by Morris.

Note: The PP400 can also be determined using the speed calibration feature.

PP400 - Standard Drive			
Tire Size	**Tire Style**	**Rating**	**PP400**
600/50-22.5	328	16 ply	665

Speed Calibration

If the operator does not know what the PP400 should be, or, if more accuracy is desired for present levels of tire inflation or soil conditions, the monitor can be put into “Speed Calibration” mode, pulses will be counted while driving a specified distance.

Note: This should be checked under normal field conditions with tanks half full.

To start the Pulse Counting Mode:

1. Measure and mark out 400 feet (121.92 m).

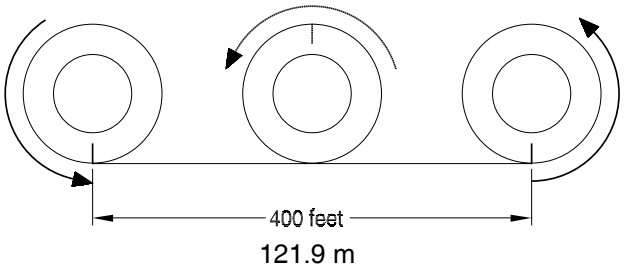

Monitor Settings - Continued

PP400 - Continued

Speed Calibration - Continued

2. Select “Speed Settings” under the “Settings Menu”.
3. Then select “Speed Calibration”.

   Use the Up/Down keys to select “Continue Calibration” at which point the monitor will request “Start Driving”.
4. Drive the marked distance and the monitor will count the number of pulses.
5. When the distance has been travelled, stop, press the SELECT key to stop the pulse counting. This will “Exit and Save” the new pulse count under the “Speed Settings” menu.
6. The new value will now be displayed under “Wheel Pulses Per 400 Feet” (PP400).
7. Select “Exit and Save” to exit “Speed Settings” and return to the main menu.

Note: The monitor can accept PP400 values from 50 to 9999. Therefore, if the new count is less than 50, the existing count is not replaced. The monitor will state “Pulses Too Low” and display options to “Continue Driving” or “Cancel Calibration”.

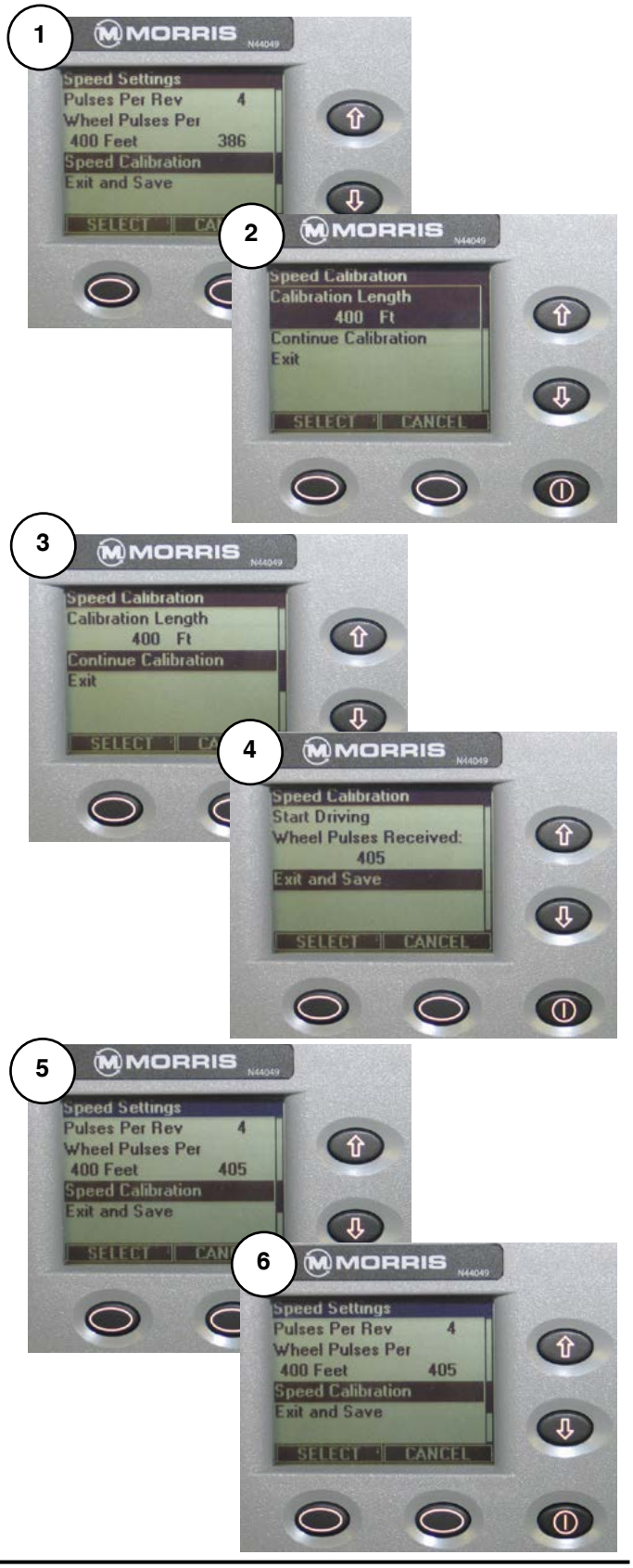

Alarms

Introduction

All configured sensors and various other operating conditions are continuously monitored. Alarms fall into one of the following three categories:

- **Sensor alarms** are alarms which are generated when information returned by a sensor exceeds the appropriate threshold.
- **Communication alarms** occur when a sensor repeatedly does not respond to attempts at communication.
- **System alarms** are for various other conditions that are found to be in fault.

When an alarm condition occurs the monitor will beep repeatedly and an alarm screen will pop up indicating the fault condition.

The audio alarm and alarm screen persist until the alarm condition is fixed or until it is acknowledged by the operator. Follow the steps on the screen to fix or acknowledge the alarm.

After acknowledgement, the “Operating Screen” will be displayed with any unfixed alarms shown in the “active alarm window”. If there are more than one acknowledged alarms, they will cycle on the display.

When the alarm condition is corrected, the alarm notification is removed and ground speed will again be displayed in bottom window.

Alarm Screen

Alarm - Operating Screen

Nuisance Shaft Alarm

Low application rates of Canola may cause the seed shaft to rotate less than 2 rpm.

The low shaft rpm will cause the monitor to give a shaft alarm, since the shaft is rotating below the defalt alarm threshold of 2 rpm.

To avoid this nuisance alarm change the seed shaft low rpm alarm setting to 0.5 rpm.

Note: Change the setting back to 2 rpm when returning to higher application rates.

Note: To *“TURN OFF”* any shaft not in use set pulses to 0. This will eliminate any nuisance alarms caused by an inactive shaft. Also the corresponding bin should be “Disabled” to eliminate any nuisance alarms caused by an empty bin.

Alarms - Continued

"In Motion" Notification

The "In Motion" condition means that the monitor, based on ground speed and clutch state, considers that the system is supposed to be actively seeding.

The monitor emits a double beep whenever the "In Motion" condition becomes true or false. This condition is defined as *speed greater than 2 mph (3.2 Kph)* and *drive clutch engaged.*

1. If ground speed is less than 2 mph (3.2 Kph) for more than 30 seconds the monitor will alarm and display "Should be Seeding".
2. If ground speed is greater than 2 mph (3.2 Kph) for more than 30 seconds and clutch is not engaged the monitor will alarm and display "Clutch Switch is Off".
3. Certain alarms are inhibited when the "In Motion" condition is false. These are described elsewhere in this manual, but an example is whether to generate an alarm for a stopped shaft.

If a speed sensor is unavailable the speed is considered to be greater than 2MPH for the purpose of this variable. This allows metering shaft monitoring to work normally, as if there were motion.

Low Fan Alarms

Low fan alarms are handled differently because a stopped fan can result in damage to the metering mechanics as unblown material accumulates. **Low fan alarms can not be acknowledged while the system is "in motion".** Thus, if a low fan alarm occurs during active seeding, the user will **not be able** to silence the alarm with the soft key, but will need to stop the vehicle or disengage the clutch. When this happens, the monitor accepts it as an acknowledgement of the alarm, and an effective "automatic acknowledge" takes place, resulting in the beeper being silenced and the resumption of normal display with "Fan Low RPM" flashing in the alarm window.

Blockage Sensing

Module Installation

When blockage sensing systems are used, modules must be installed in the system, runs per module set, and calibration done while seeding.

Note: When optical modules are added, they must be learned by the monitor. See the "Sensor Installation".

Runs per Module Setup

The number of runs connected per blockage module must be set in order for the system to operate correctly. This should only need to be done when the blockage modules are first installed, and afterwards only if the number of sensors is changed.

Optical Sensors the number of runs connected is set in the monitor. Refer to "Monitor Settings".

Individual Runs Setup

Optical Sensors Only

Runs can be enabled/disabled individually. This feature is useful for turning off runs that are not in use. Refer to "Monitor Settings".

Blockage Sensing - Continued

Blockage Module Test

This test will check the blockage module for proper functioning. Number of runs reported should match the number of sensors connected to each module.

To perform the blockage module test follow the steps below.

1. Stop driving the machine.

   From the “Operating Screen” press the MENU key to enter the “Settings Menu”.

   Use the Up/Down keys to highlight “Blockage Module Settings” press the SELECT key to enter the function.

   Use the Up/Down keys to highlight “Blockage Module Test” press the SELECT key to enter the function.

2. The monitor will indicate when a module test is complete. Testing may take a few minutes depending on configuration and application.

3. Once all modules have completed their test the monitor will display how many optical sensors each module could communicate with. If this number does not match the actual number connected check the wiring and installation of the sensors.

4. Once all of the modules have been tested use the Up/Down keys to highlight “Exit” press the SELECT key to return to the “Blockage Module Settings” menu.

   Use the Up/Down keys to highlight “Exit and Save” press the SELECT key to save the changes and return to the “Settings Menu”.

At any time during this test, CANCEL may be pressed to exit the “Blockage Module Test”.

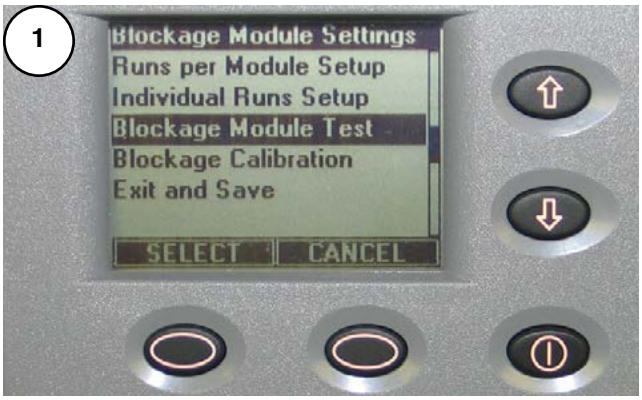

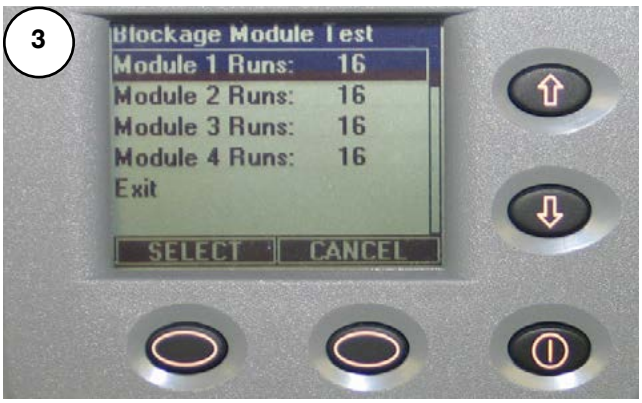

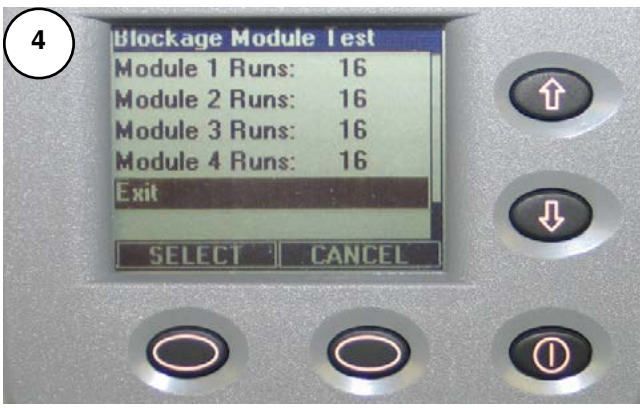

Blockage Sensing - Continued

Blockage Calibration

In calibration mode, the module determines the normal seed flow rate for each run. This calibrated flow rate is used to determine the threshold for indicating that a run is blocked.

To calibrate the blockage modules follow the steps below.

1. Start seeding in the field.

   From the “Operating Screen” press the MENU key to enter the “Settings Menu”.

   Use the Up/Down keys to highlight “Blockage Module Settings” press the SELECT key to enter the function.

   Under “Blockage Module Settings” use the Up/Down keys to highlight “Blockage Calibration” press the SELECT key to enter the function.

2. The monitor will indicate what number of sensors are “Calibrating”, “Calibrated” and “Total” installed sensors. Calibration may take a few minutes depending on the number of sensors and application rate.

3. Once all of the sensors have been calibrated (calibrated = total) press the SELECT key to exit and return to the “Blockage Module Settings”.

4. Use the Up/Down keys to highlight “Exit and Save” press the SELECT key to save the changes and return to the “Settings Menu”.

At any time during this test, CANCEL may be pressed to exit the “Blockage Calibration” leaving the sensors uncalibrated.

Important

***CALIBRATION* must be done each time the seeding rate or the seed type is changed.**

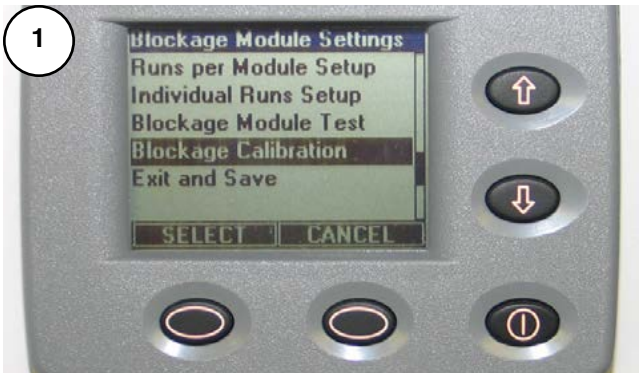

Blockage Sensing - Continued

Optical Blockage Run Bad Alarms

If any monitored run does not pass the self-test mode on monitor power-up, the blockage module will report that run is bad. The optical sensor or wiring may be faulty or too much light may be getting into the tube.

Blockage Alarms

During seeding, if the blockage monitor senses a low seed count or does not see any seeds from a run sensor, an alarm will be displayed to show which runs are blocked.

The alarms can be silenced with the OK soft key.·

Note: If this alarm is active when the "In Motion" condition becomes FALSE, this alarm is suspended until the "In Motion" condition becomes TRUE.

Area Display

There are two area counters, field area and total area. They are both accumulated whenever the system “In Motion” condition is true. Area counts are stored in memory when the unit is turned off.

The area counts can be displayed on the “Operating Screen” as outlined in “Navigating the Operating Screen”. The FIELD AREA and the TOTAL AREA are displayed to the nearest tenth of an acre (or hectare).

Resetting Area

To clear FIELD AREA and/or TOTAL AREA follow the steps below.

- From the “Operating Screen” press the MENU key to enter the “Settings Menu”.
- Use the Up/Down keys to highlight “Implement Setup” press the SELECT key to enter the function.
- Use the Up/Down keys to highlight the desired function of “Clear Field Area” or “Clear Total Area” press the SELECT key to enter the function.
- The monitor will ask “Are you sure?” leave as “Yes”.
- Use the Up/Down keys to highlight “Enter Selection” press the SELECT key to clear area and return to the “Implement Setup” menu.
- Use the Up/Down keys to highlight “Exit and Save” press the SELECT key to save the changes and return to the “Settings Menu”.

Note: Field area will not be reset to zero when total area is reset.

Sensor Replacement

The monitor will alarm the operator if there is a faulty sensor in the system by displaying a communication error for the sensor.

To replace a faulty sensor follow the steps below.

Example: Replace Shaft 1 sensor.

1. From the “Operating Screen” press the MENU key to enter the “Settings Menu”.

   Use the Up/Down keys to highlight “Installation” press the SELECT key to enter the function.

2. Use the Up/Down keys to highlight “Replace a Sensor” press the SELECT key to enter the function.

3. The monitor will highlight “Select Sensor” press the SELECT key to enter the function.

   Use the Up/Down keys to display desired sensor to be replaced (i.e. Shaft 1), press the SELECT key to accept selection.

4. “Proceed” will now be highlighted, press the SELECT key to enter mode.

5. The monitor will then display “Plug in new sensor for: Shaft 1”. Unplug the old sensor and plug in the new sensor.

6. Once the monitor acknowledges the new sensor, it will emit a double beep and acknowledge that the sensor has been replaced.

   “Exit and Save” will be highlighted, press the SELECT key to save the changes and return to the “Installation” menu.

7. Use the Up/Down keys to highlight “Exit” press the SELECT key to return to the “Settings Menu”.

Note: Sensors can also be added or removed from the system in the same manner by slecting the choice from step 2.

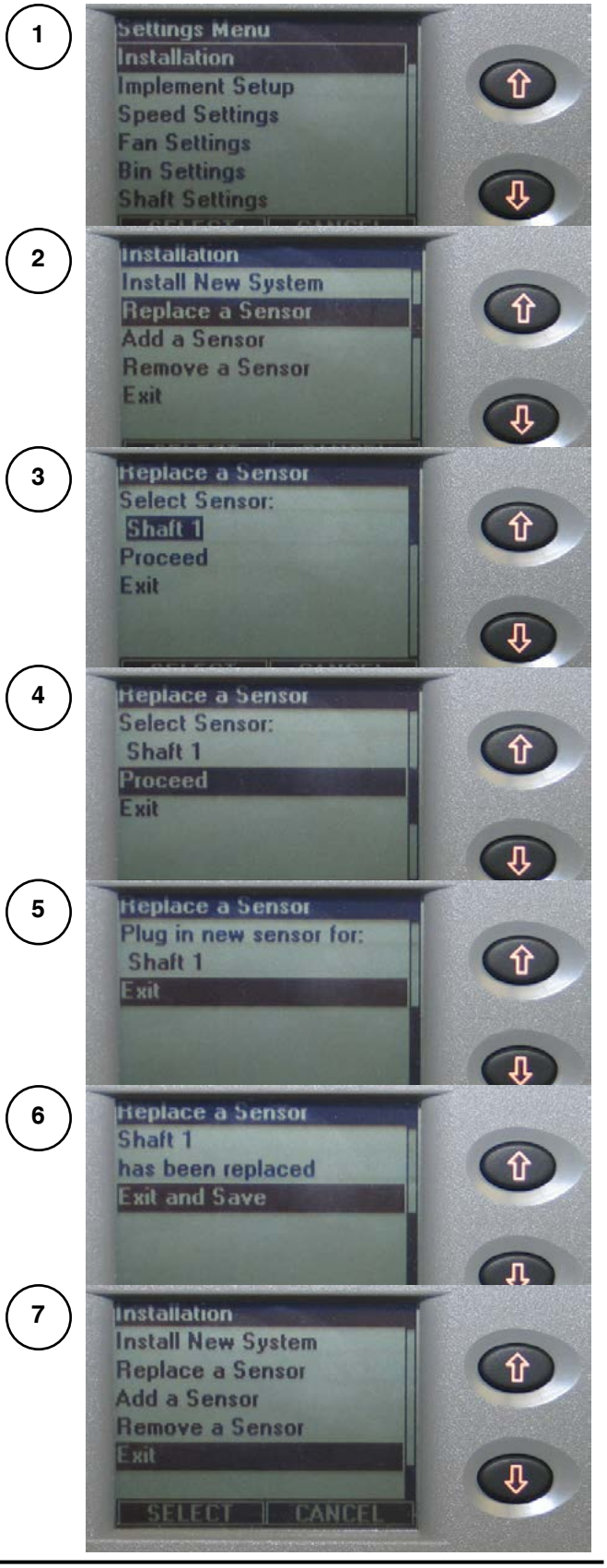

Sensor Gap Settings

Reed Switch Sensors

These sensors are used on slowly revolving shafts, in this case the meters and ground speed.

Check the gap between the sensor and actuator.

A gap of .030 inch (0.76 mm) is recommended.

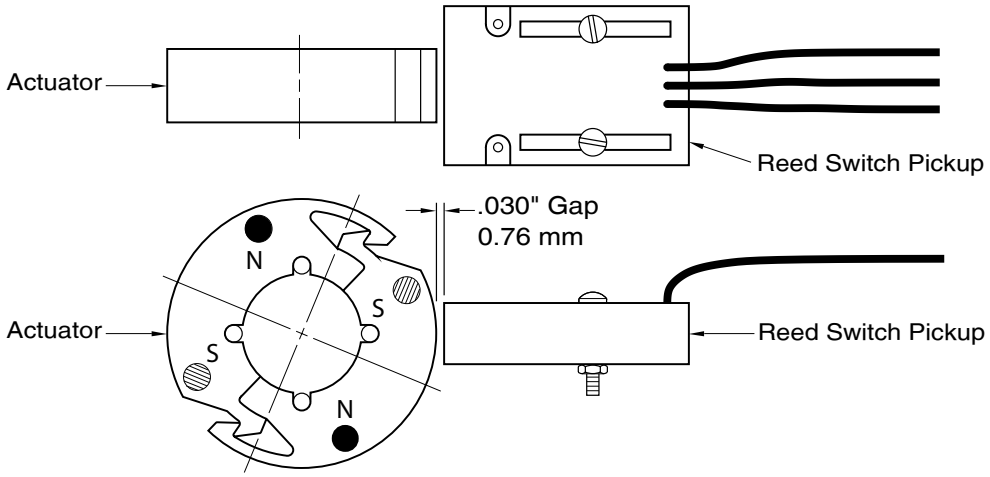

Variable Reluctance Sensors

These sensors are used on high speed shafts, in this case the fan.

Target to sensor gap is critical with these sensors.

A gap of .030 inch (0.76 mm) is recommended.

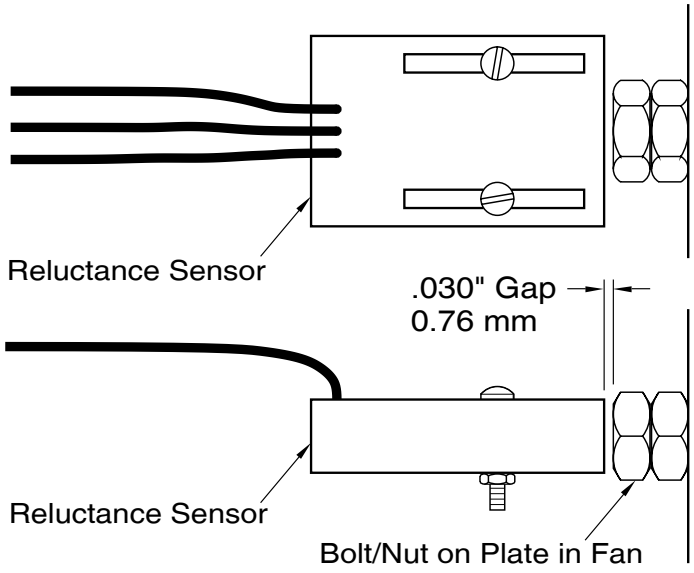

Trouble Shooting Guide

Most electronic problems are usually one of the following:

- Harness connections.
- Damaged harness wires.
- Loose terminal in harness plug.
- Sensor to Actuator clearance.
- Defective sensor.

The monitor will alert the operator of these problems as a communication error.

Checking Harness

First, check for the obvious things like broken connections, loose terminals, insulation rubbed off and so forth.

- Check continuity of wires with ohm meter.

Checking Sensors

The best approach to testing a sensor is to substitute a suspected sensor with a known good one. If the problem goes away, the sensor is faulty. If it does not go away, it is faulty wiring.

Bin Level Sensors ensure there is no foreign material covering the optical sensor. Remove material with a cloth as not to damage lens.

Make sure sensor wires are not damaged.

Checking Blockage System

Check modules by performing a blockage module test on the monitor.

Optical sensors make sure the “optical eyes” are not coated with material or worn down. Remove material with a cloth as not to damage lens.

Pin sensors make sure there is no buildup of material on the pins. Remove material buildup with a knife and gently scraping away the material buildup.

Make sure sensor wires are not damaged.

Notes

Section 7: Maintenance

Section Contents

General 7-3
Safety 7-3
Tighten Bolts 7-4
Tires 7-4
Daily Maintenance 7-5
Lubrication 7-6
Air Delivery System 7-8
- General 7-8
- Tank Lid Adjustment 7-9
- Air Leak Check 7-11
- Fan 7-12
  - Fan Screen 7-12
  - Fan Impeller 7-12
  - Storage 7-12
- Impeller Clearance 7-13
- Hoses 7-13

Hydraulic Orbit Motor 7-14
- Repair/Replacement 7-14

Tie Rod - Tow Between 7-15
Metering 7-16
- Metering Wheel Replacement 7-16
- Seed Plate Adjustment 7-20
- Blank Off Installation 7-21

Opener Maintenance 7-22
- Bushing Replacement 7-22
- Cylinder Replacement 7-22
- Shank Replacement 7-23
- Opener Body Assembly 7-24
- Opener Assembly 7-26

Section Contents - Continued

Bleeding Hydraulic System 7-36
Hydraulic System Trouble Shooting 7-37
Hydraulics 7-38
Wheel Bearings 7-39
Implement Hub 7-39
Contour Opener Hub 7-40
Wheel Bearing Adjustment 7-41
Air Brake Maintenance 7-42
Every Three Months or 25,000 Miles 7-42
Every Six Months or 50,000 Miles 7-42
Greasing the Slack Adjuster 7-42
Slack Adjuster Function Test 7-44
Troubleshooting 7-44
FF2 Full Function Valve Fitting General Installation Guidelines 7-45
Lock Adjustment 7-46

CAUTION

BE ALERT

SAFETY FIRST

REFER TO SECTION 1 AND REVIEW ALL SAFETY RECOMMENDATIONS.

General

This section deals with two goals, maximum life and dependable operation. Adopt a regular maintenance and lubrication program. Care and sufficient lubrication is the best insurance against delays.

Safety

- Always shut off the tractor and remove key before dismounting.
- Guard against hydraulic high pressure leaks with hand and face protection.
- Never work under the implement unless it is in the down position or transport lock pins are in place and secured with hair pins. Do not depend on the hydraulic system to support the frame.
- Always wear safety goggles, breathing apparatus and gloves when working on seeder filled with chemical. Follow manufactures recommended safety procedures when working with chemicals or treated seeds.
- Do not feed left over treated seed to livestock, treated seed is poisonous and may cause harm to persons or livestock.

Warning

Securely support any machine elements that must be raised for service work.

Caution

Keep service area clean and dry. Wet or oily floors are slippery.

Tighten Bolts

- Before operating the machine.
- After the first two hours of operation.
- Check tightness periodically thereafter.
- Use Bolt Torque Chart for correct values on various bolts.
- Note dashes on hex heads to determine correct grade.

Note: DO NOT use the values in the Bolt Torque Chart if a different torque value or tightening procedure is given for a specific application.

- Fasteners should be replaced with the same or higher grade. If higher grade is used, only tighten to the strength of the original.

Bolt Torque Chart

Grade 5 Bolt Marking		Bolt Size	Grade 8 Bolt Marking	
Nm	lb. ft.		lb. ft.	Nm
11	8	**1/4**	12	16
23	17	**5/16**	24	33
41	30	**3/8**	45	61
68	50	**7/16**	70	95
102	75	**1/2**	105	142
149	110	**9/16**	155	210
203	150	**5/8**	210	285
366	270	**3/4**	375	508
536	395	**7/8**	610	827
800	590	**1**	910	1234
1150	850	**1-1/8**	1350	1850
1650	1200	**1-1/4**	1950	2600
2150	1550	**1-3/8**	2550	3400
2850	2100	**1-1/2**	3350	4550

Tires

- Inspect tires and wheels daily for tread wear, side wall abrasions, damaged rims or missing lug bolts and nuts. Replace if necessary.
- Tighten wheel bolts - refer to Bolt Torque Chart.
- Check tire pressure daily, when tires are cold.
- Correct tire pressure is important.
- Do not inflate tire above the recommended pressure.

Tire Specifications

SIZE	LOAD RANGE	PRESSURE
4.80-8 NHS	4 ply rating	12 P.S.I.
12.5L x 15SL	12 ply rating	52 P.S.I.
12.5L x 15FI	F	90 P.S.I.
16 X 6.5-8 NHS	4 ply rating	12 P.S.I.
600/50-22.5	16 ply rating	22 P.S.I.

⚠ Caution

Tire replacement should be done by trained personnel using the proper equipment.

Wheel Bolt Torque

SIZE	Torque
1/2	75 lb. ft. (102 Nm)
9/16	110 lb. ft. (149 Nm)
5/8	150 lb. ft. (203 Nm)
3/4 Grade 8	400 lb. ft. (542 Nm)

Daily Maintenance

- Check for and remove any water in primary collectors and pressure lines after rainy weather. Remove all inspection doors and collector bottoms to drain water from the tanks and collectors.
- Reinstall collector bottoms and inspection doors.
- Ensure fan screen is clear of debris.

Note: Start fan and run for 3 - 5 minutes prior to loading machine to get rid of accumulated moisture.

- Check lid seals for damage, and that they are sitting properly on steel ring.
- Check tank pressure hoses for leaks, cracks or plugging.
- **Check the following areas for air leaks:**
  - **Tank inspection door**
  - **Metering body assembly seals**
  - **Collector assembly seals**
  - **Tank lid**

  Refer to “Air Leak Check” under Air System Maintenance.
- Check monitor wiring that all sensor wires are properly routed and retained.
- Check for plugged hoses.
- Cycle Collector Valve five times to ensure parts are free to move.
- Ensure drive chains are cleared of debris.
- Check torque on wheel bolts.

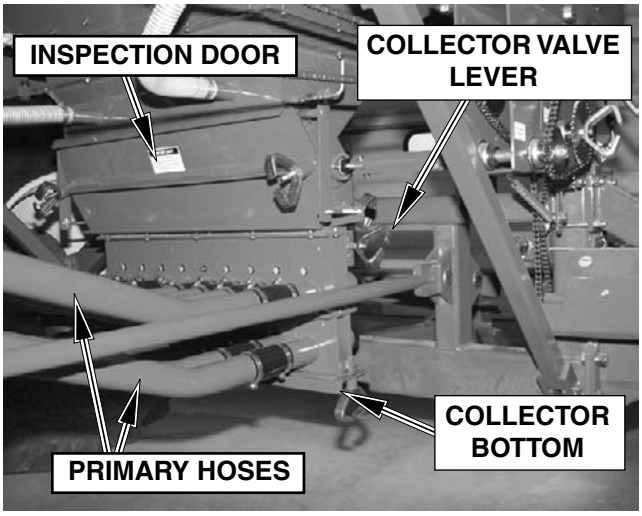

Double Shoot Shown

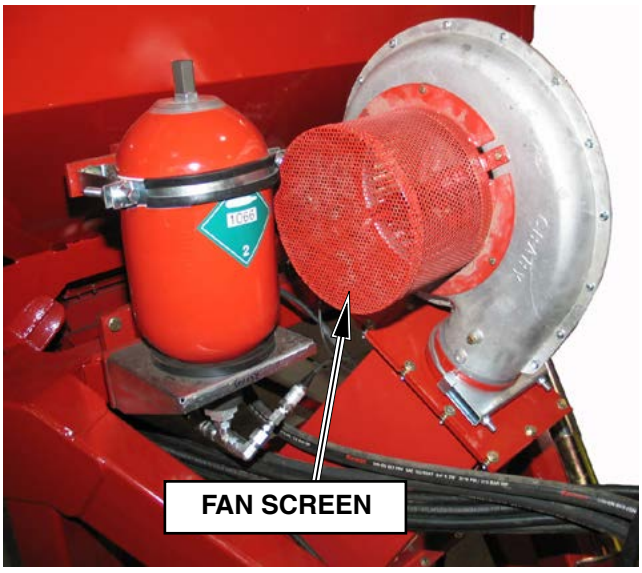

Lubrication

Greasing pivot points prevents wear and helps restrict dirt from entering. However, once dirt does enter a bearing, it combines with the lubricant and becomes an abrasive grinding paste, more destructive than grit alone.

- Apply new lubricant frequently during operation to flush out old contaminated lubricant.
- Use a good grade of **lithium based grease**.
- Use a good grade of machine oil.
- Clean grease fittings and lubricator gun before applying lubricant.

Refer to the following photos for grease fitting locations.

1. **Drive Chains**
   - Oil every 50 hours.
2. **Slow Speed Drive**
   - Grease every 50 hours.
3. **Articulated Hitch Pivot**
   - Grease every 50 hours.
4. **Cart Wheel Hubs with no Air Brakes**
   - Grease every 500 hours or seasonally, whichever occurs first.
5. **Cart Wheel Hubs with Air Brakes**
   - Make sure hubs have oil and the plug is in the hub caps. Use 80-90 gear lube.

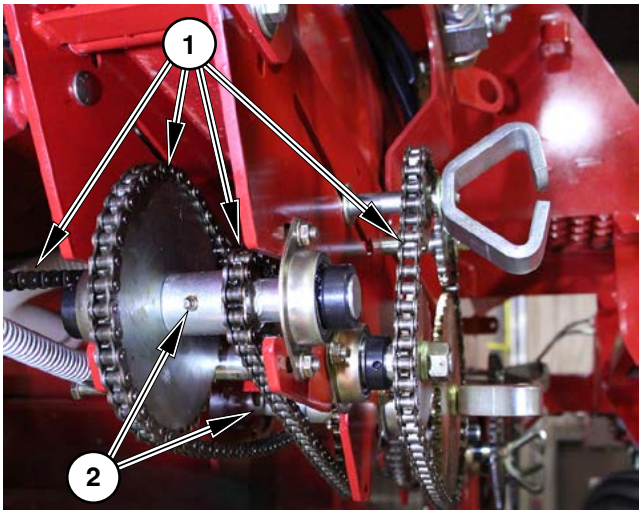

Transmissions

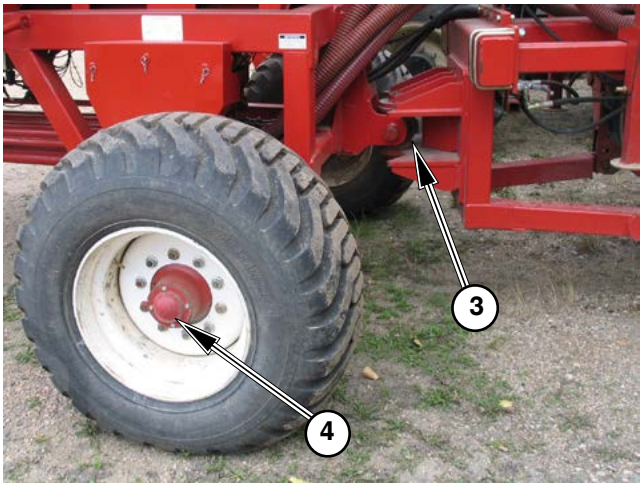

Lubrication - Continued

6. Meter Drive Wheel Hub

- Grease every 5,000 acres (2,000 hectares) or seasonally, whichever occurs first.

7. Packer Wheel Hubs

- Grease every 5,000 acres (2,000 hectares) or seasonally, whichever occurs first.

8. Wheel Hubs on Drill

- Grease every 500 hours or seasonally, whichever occurs first.

9. Gauge Wheel Castor Pivot

- Grease every 50 hours.

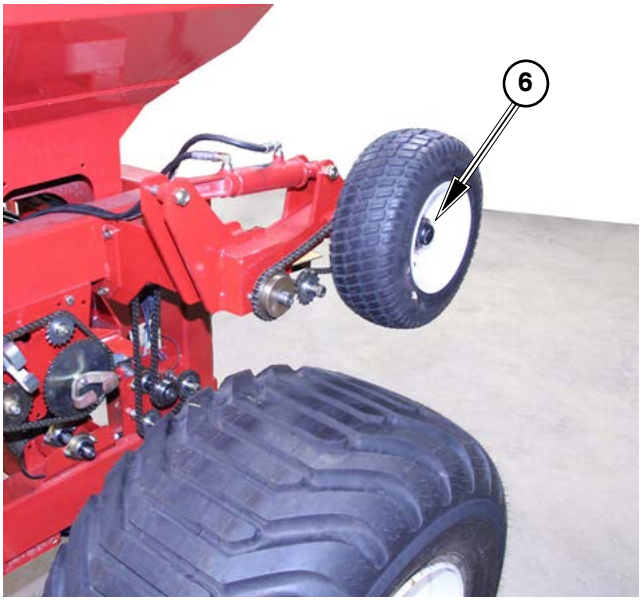

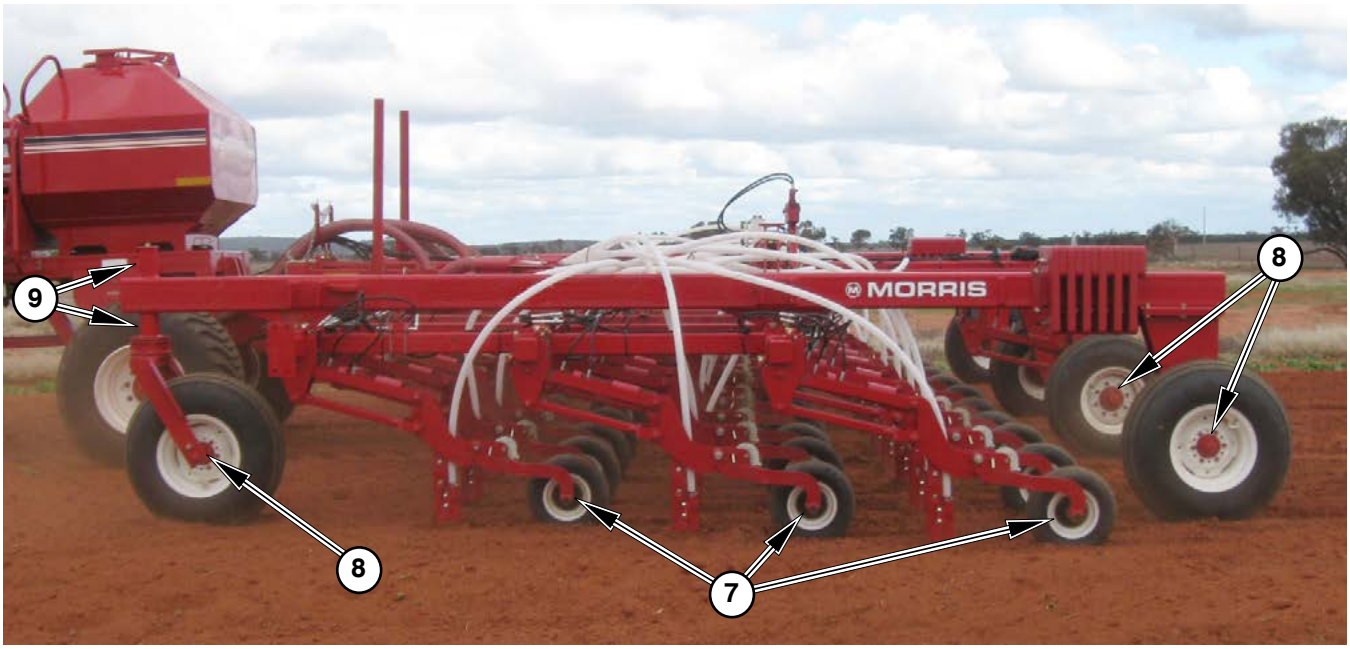

Air Delivery System

General

The air delivery system of all air carts is extremely important for the proper metering of product to the openers. The metering system on all pressurized air carts is sensitive to air leaks. **Loss of tank air pressure could affect feed rates, which could become erratic or even stop.**

- Regularly check that all hoses are free from kinks or blockages throughout the day. To check for blockages raise seeding tool out of the ground and with the fan running turn crank a couple of turns. Equal amounts of material should be deposited under each boot. If not, check the following for blockage:
  1. Seed openers and secondary hoses.
  2. Divider heads by removing access doors.
  3. Primary hoses and collectors.
  4. Metering wheels for damage to the flutes of the wheel.
- Keep fan inlet screen clear and free from debris.
- Place a plastic bag over the fan when the unit is not in use. This helps prevent moisture from entering the system.
- Check periodically and at the end of each season for air leaks at hose connections.
- Check periodically and at the end of each season for air leaks in the following areas:
  1. Tank lid seals.
  2. Metering body shaft seals.
  3. Metering body to tank seals.
  4. Collector to metering body seals.
  5. Fan to plenum.
  6. Plenum to collector.
  7. Inspection doors, for leaks and loss of seal memory.
  8. Collector door seals.
  9. Couplers between air cart and seeding tool.
  10. Access doors on divider heads.

Note: There must not be any air leaks from the tank. This air leakage causes air turbulence in the tank which can result in inaccurate metering rates.

- Once a year check for wear of primary and secondary hoses.

⚠ Caution

Care should be taken when working near the air cart while the fan is running. Product blowing out of the system could cause personal injury.

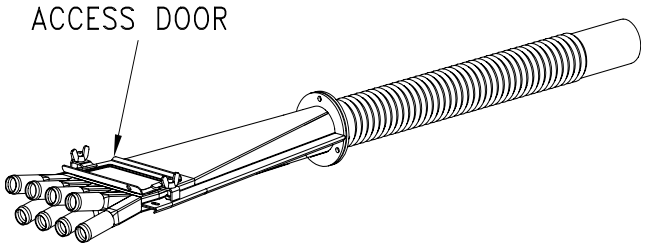

Note: Extended life can be obtained if the hoses are rotated 1/4 turn once a year.

Air Delivery System - Continued

Tank Lids

The lid seal is probably the area that sees the most abuse due to the activity associated with filling the tanks.

With each fill the lid seals should be inspected for cuts, abrasions, debris in the seal and ensure the seal is positioned properly on the steel rim around the tank opening.

Tank Lid Adjustment

Check Tank Lid tension on *all tanks* at beginning of each season and periodically during season for air leaks. The following checks and adjustments must be made to prevent air leaks from occurring:

- Check for any foreign material embedded into seal. Clean out foreign material from seal surface.
- Check seal for cuts and abrasions. If seal is cut or severely worn, then replace seal.
- Ensure seal is positioned properly on steel rim around tank opening.
- Use a 0 - 100 lb. (0-45 kg) spring scale to check the tank lid opening force. With the lid closed place one end of the scale *six inches* (15 cm) from the end of the tank lid lever. Pull straight up on the scale and note the maximum force it takes to open the lid. The force needed to open the lid **must be greater than 65 lbs (29 kg).** Adjust the lid latch adjusting bolt as necessary. The lid latch should close with a **snap.** This will ensure that the lid is sufficiently tight and prevent any leaks.
- Re-check for leaks. If lids still leak turn down bolt one or two more turns. Re-check for leaks.

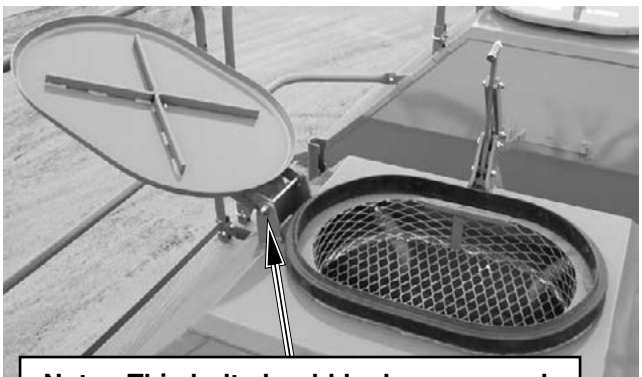

Note: This bolt should be loose enough to allow lid to float in the slot.

Important

It is imperative that no air leaks occur in the air cart tank as even the smallest air leak from the lid will lead to material bridging in the tank thereby causing misses in the field.

Note: When air cart is not in use, leave lid latches loose to help maintain resilience of the seals.

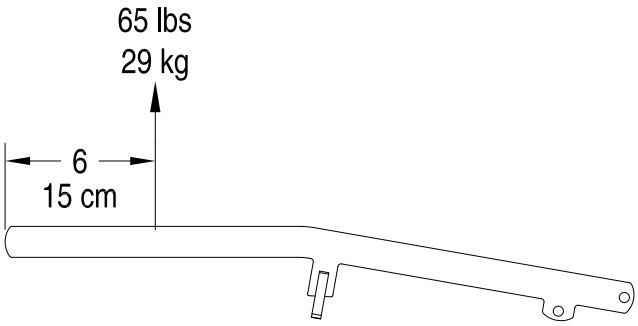

These bolts and lock nuts must be tightened to maintain a friction fit so the lid latch stays stationary when in open position.

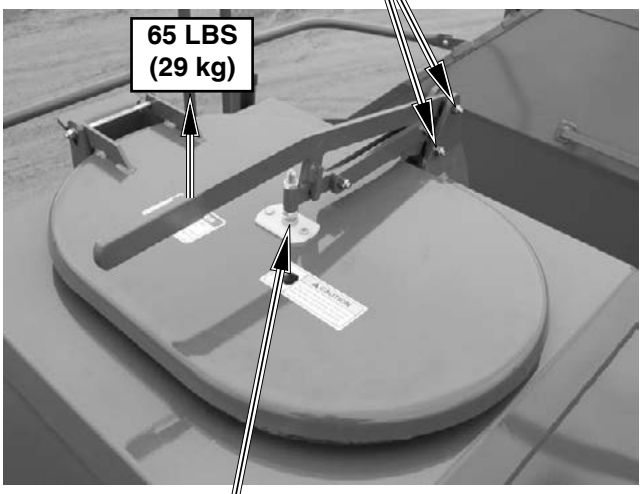

Adjust the lid latch bolt to obtain a force *greater than 65 lbs (29 kg)* **to open the lid.**

Air Delivery System - Continued

Tank Lid Adjustment - Continued

3rd Tank Option

- Check for any foreign material embedded into seal. Clean out foreign material from seal surface.
- Check seal for cuts and abrasions. If seal is cut or severely worn, then replace seal.
- Ensure seal is positioned properly on steel rim around tank opening.
- Lid cam lock uses a 2-position bushing initial setting is on the small diameter. If additional force is required flip both bushings to the larger diameter side.

Note: When air cart is not in use, leave lid latches loose to help maintain resilience of the seals.

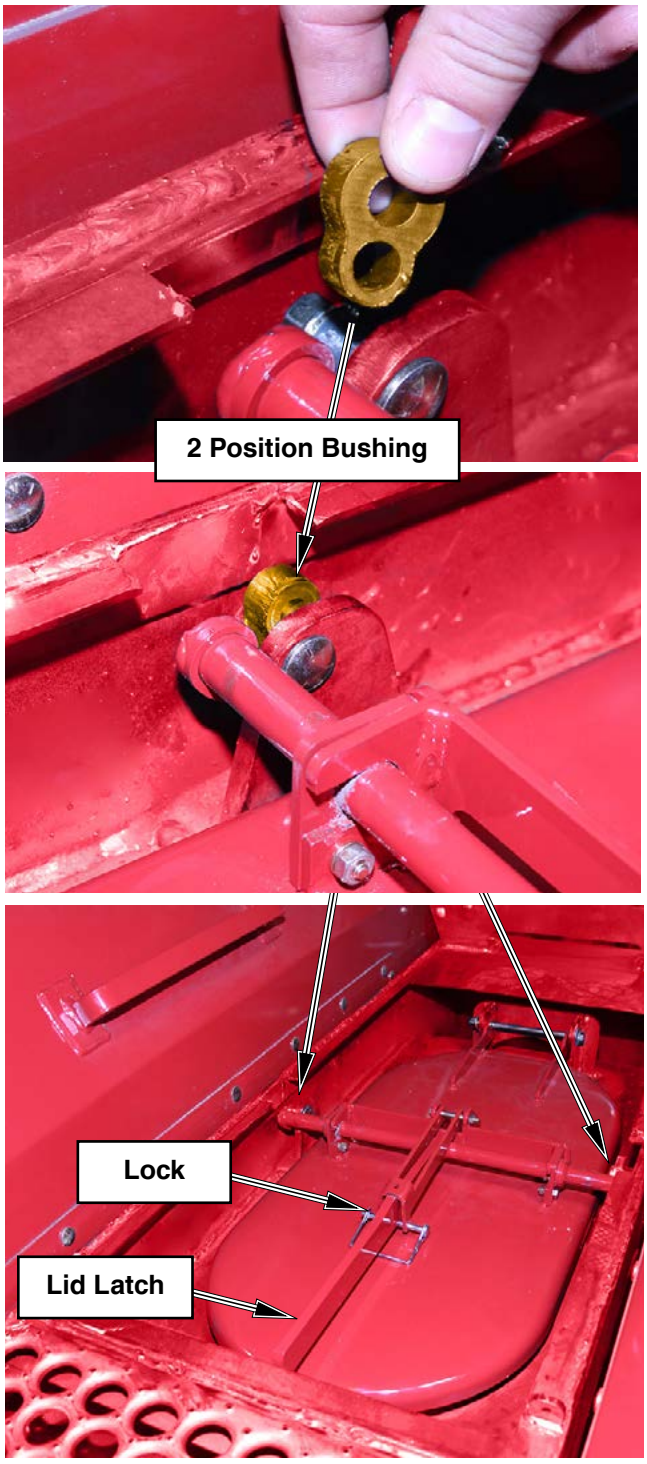

Air Delivery System - Continued

Air Leak Check

It is ***imperative that no air leaks occur*** in the Air Cart tank. Any air leaks could cause loss of tank air pressure affecting feed rates, which could become erratic or stop.

To prevent this from occurring, it is strongly recommended that a pressure test be conducted prior to seeding time. This can be performed very easily and simply by completing the following steps:

- Clean fan impeller and adjust tank lids.
- Disconnect the 2 1/2" (64 mm) diameter primary hoses from the rear of the cultivator at the primary hose coupler(s) by loosening the four 3/8" bolts.
- Install the blank off plate that is supplied with the Air Cart at each coupler and retighten the 3/8" bolts. If the blank off plates are not readily at hand a piece of cardboard can be used in its place.
- Once the blank off plates have been installed, start the fan and run at 4,500 rpm.

Check the following areas for air leaks:

1. Tank lid seals.
2. Metering body shaft seals.
3. Metering body to tank seals.
4. Collector to metering body seals.
5. Fan to plenum and plenum to collector.
6. Clean-out doors, for leaks and loss of seal memory.
7. Collector door seals.
8. Diverter valves and double shoot mounting plates.
9. Tanks union plate.
10. Tank site glasses.

Air leaks can be detected by spraying a soapy water solution onto the seal area. If bubbling of soap occurs, the seal has a leak. Another method is to use your hand to feel for any air movement around the seal. This method requires a calm day, as the wind can make it difficult to detect a small leak.

- If any of the above areas leak, remove the parts and replace the seal. Ensure upon reassembly that the parts are tightened sufficiently to prevent air leakage.
- Remove the blank off plates before using the Air Cart.

Once the pressure test is complete, check the following areas for air leaks:

11. Couplers between seeder and cultivator.
12. Access doors on divider heads.

Important

It is imperative that no air leaks occur in the Air Cart tank, as even the smallest air leak will lead to material bridging in the tank, thereby causing misses in the field.

Note: When Air Cart is not in use leave lid latches and clean-out doors loose to help maintain resilience of the seals.

Air Delivery System - Continued

Fan

Debris can build up on the fan screen and blades causing reduced output of the fan. The lack of air flow even at higher fan speeds will cause material plugging of the air system.

The build up of material during operation can cause the following:

1. Fan rpm will increase without increasing oil flow to orbit motor.
2. Air Cart distribution system plugging from a lack of air flow (Increasing fan rpm has little or no effect).

Fan Screen

- Ensure fan screen is clear of debris. Check periodically through the day.

Fan Impeller

The fan blades may become plugged under high humidity/dusty conditions/high insect counts.

Under severe conditions the fan blades should be inspected daily and cleaned as required.

Under normal conditions the fan should be inspected and cleaned at least once a season.

- Care should be taken in cleaning all fan blades thoroughly to restore the fans peak performance.
- Ensure that the balance clips located on the fan blades are not removed, as this will put the fan out of balance.

Storage

To prevent water entering the air system, cover the fan intake with a plastic bag, whenever the seeder is not in use.

Note: Be sure to remove fan cover prior to starting fan. Serious damage could result to the fan.

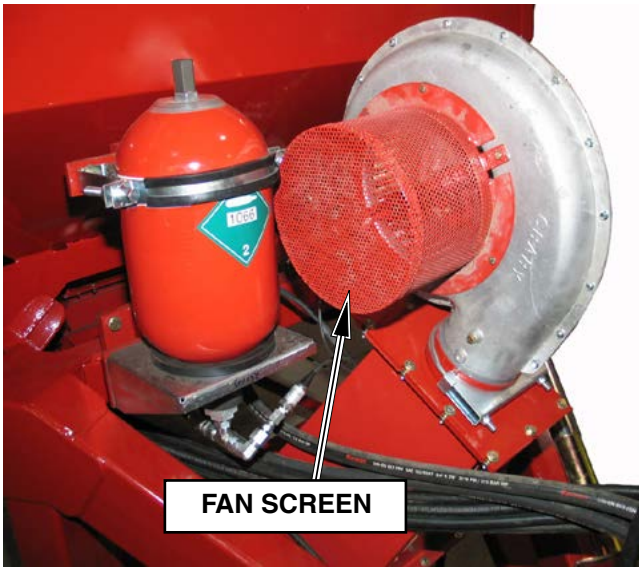

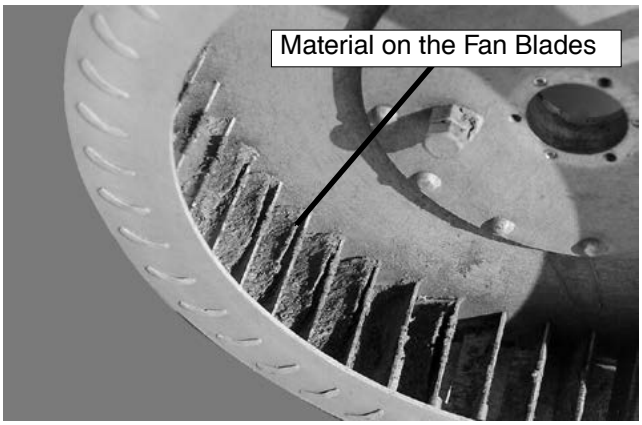

Note: Material build up on the fan blades could cause the fan to be out of balance. The added vibration of the out of balance impeller will reduce the life of the fan components.

Air Delivery System - Continued

Impeller Clearance

The impeller should be centred inside the housing to avoid contact between the impeller and housing.

The distance "X" between the impeller and housing inlet, when centred, will be approximately 3/8" (9 mm) to 1/2" (12 mm).

When assembling fan ensure flange surfaces of housing are clean.

Apply a 1/4" (6 mm) silicone bead to one flange surface of housing including outlet seam.

Mate surfaces and secure in place with 1/4" x 1" hex bolts (G) and 1/4" serrated lock nuts (H).

Note: Torque 1/4" bolts to 49 in. lb.

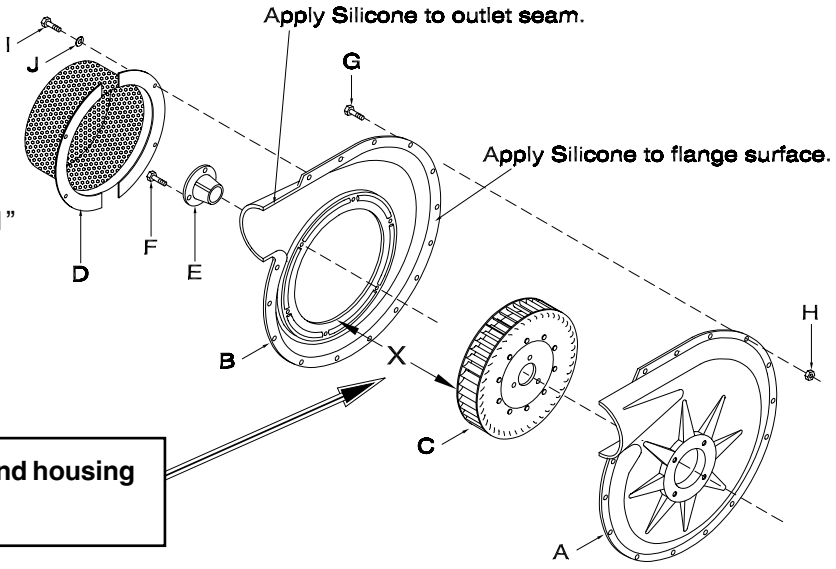

Set clearance "X" between the impeller and housing inlet from 3/8" (9mm) to 1/2" (12 mm).

Hoses

Inspect air delivery hoses for wear and replace as required. Check areas where hoses maybe exposed to moving parts such as hitch hinge area.

Also, inspect hoses for blockage as rodents/birds may nest in hoses that have not been properly capped during storage.

To optimize the Air Cart air system on single shoot units the difference in length between the longest primary hose and the shortest primary hose **should not exceed six feet**.

Hydraulic Orbit Motor

The motor requires no maintenance itself.

It does, however, require clean oil so the tractor hydraulic filters must be replace regularly.

Repair/Replacement

- Remove orbit motor from the fan.

Note: The shaft should never be hammered on or forced in as this will result in motor damage upon startup.

- Remove the snap ring and front cover.
- Push out the old shaft seal and press in the new one.

Note: The bearings should never be removed from the shaft as they are pretensioned to the shaft with the motor spinning.

- Replace the O ring.
- Both the O ring and shaft seal should be greased with a *"very clean"* grease.
- Care must be taken when the front cover is installed so the shaft seal is not damaged.
- Reinstall the snap ring.
- Fill the motor case with *"clean"* oil before running.

Note: Any time a motor is replaced the case must be filled with oil before it is started, if not, a bearing failure could occur.

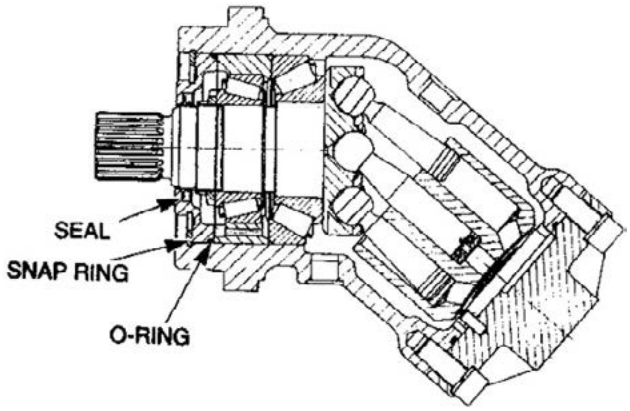

Tie Rod - Tow Between

- Check at 10 and 50 hours and periodically afterwards.
- Torque to 450 ft. lbs. (610 Nm).

Metering

The metering wheels come in 4 different sizes. Each wheel matches to a specific distribution head mounted on the seeding tool.

If the metering wheel and distribution head are not matched correctly, the distribution accuracy will be adversely affected.

Spacer plates are used to take up the extra space in each metering cup. These spacer plates vary in size according to the size of the metering wheel.

Metering Wheel Replacement

- Close tank Shut-Offs if there is product in tank.
- Remove inspection door and seed plate.
- Clean out any remaining material in the metering body and meterwheels.
- Remove all Blank Off plates.
- Remove the monitor sensor wheel and sensor mount from the right hand side of the metering body.
- Disconnect meter shaft coupler from the meter shaft and transmission drive shaft.
- Loosen the locking collars on **both** meter shaft bearings.
- Remove monitor donut and right hand metershaft bearing and spacers.
- Remove 3/8” bolts holding the meter shaft end plate on the right hand side and insert into threaded holes in end plate. Tighten down to pull end plate and remove.

Table 1

Divider Head	Metering Wheel		Spacer	
Outlets	**Number**	**Width**	**Qty**	**Width**
-	Blank Off	-	2	1 1/2” (38 mm)
7	7	1 3/4” (45 mm)	2	5/8” (16 mm)
8	8	2” (51 mm)	2	1/2” (13 mm)
9	9	2 1/4” (57 mm)	2	3/8” (9.5 mm)
10	10	2 1/2” (64 mm)	2	1/4” (6.4 mm)
11	11	2 3/4” (70 mm)	2	1/8” (3.2 mm)

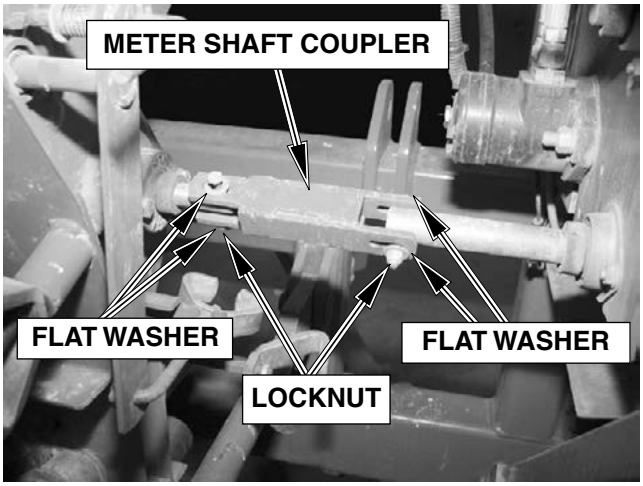

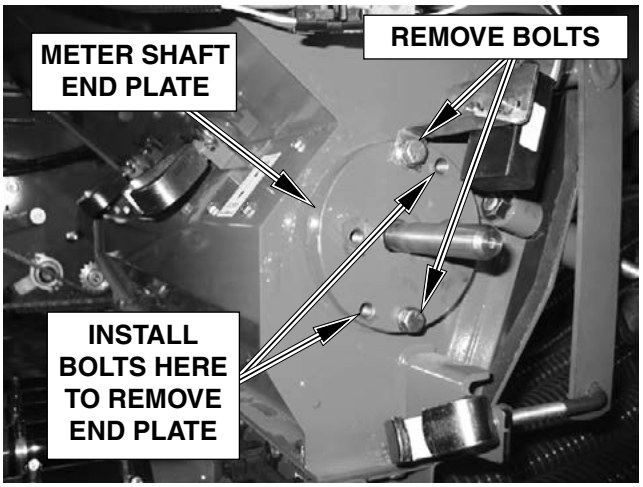

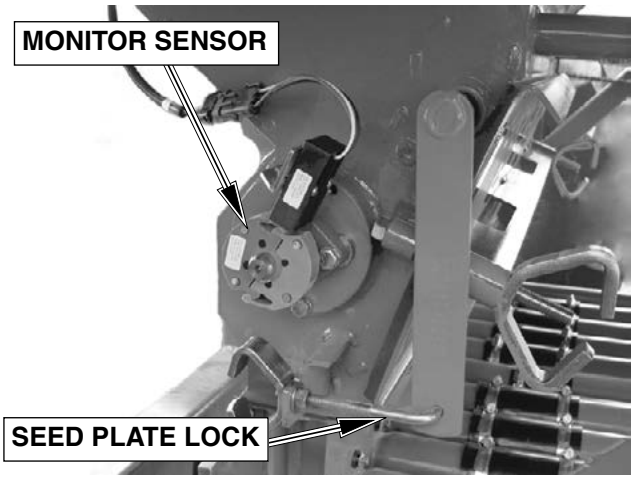

Metering - Continued

Remove the meter shaft from the right hand side.

Assembly Hint: Mark metering wheel size on the metering body. This will help in ensuring the correct order of metering shaft assembly.

- Remove nut from meter shaft and disassemble wheels and spacers.
- Replace damaged wheels and reassemble shaft. Ensure correct spacers and wheels are located and assembled in the correct order. See diagram on next page. **Note:** After each meter wheel configuration, including any "Blank Offs", add one 5/16" (8 mm) spacer. The distance between the 5/16" (8 mm) spacers should be 3" (76.2 mm) if wheels are assembled correctly.
- Tighten nut on metering shaft until it bottoms out against the shoulder.
- Check if spacers and wheels are tight. If the wheels and spacers are loose, measure shim thickness required. If 1/16" (1.6 mm) shim is required remove nut on meter shaft and install shim between the 1/4" (6.4 mm) end spacer and the spacer used for the run.
- If a 1/8" (3.2 mm) shim is required then remove nut and install 1/16" (1.6 mm) shim between 1/4" (6.4 mm) end spacer and the spacer used for the run. Remove the snap ring at the opposite end of the shaft and install the other 1/16" (1.6 mm) spacer before the 1/4" (6.4 mm) end spacer.
- Reassemble shaft and tighten nut.
- Repeat last two steps above if necessary.
- Clean out any debris remaining in the meterbody.
- Check seed plate setting - **See "Seed Plate Adjustment"**
- Install 'O' Ring onto meter shaft end plate.

Note: Apply thin layer of lubricant on 'O' Ring.

- Reinstall meter shaft assembly, snap ring end first into meter body.
- Install meter shaft end plate and monitor sensor bracket.
- Reinstall Stainless Steel Blank Off plates. See "Blank Off Installation" for more details.
- Reinstall right hand side meter shaft bearing and spacers.
- Reinstall left hand side meter shaft bearing and spacers.

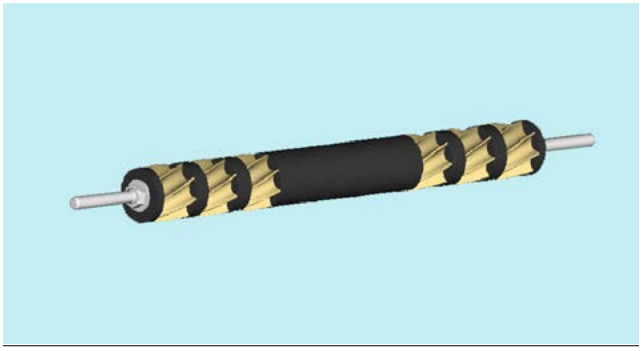

Meter shaft removed

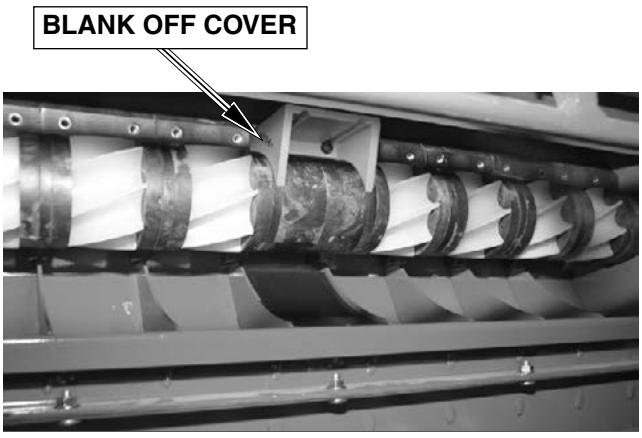

Blank Off

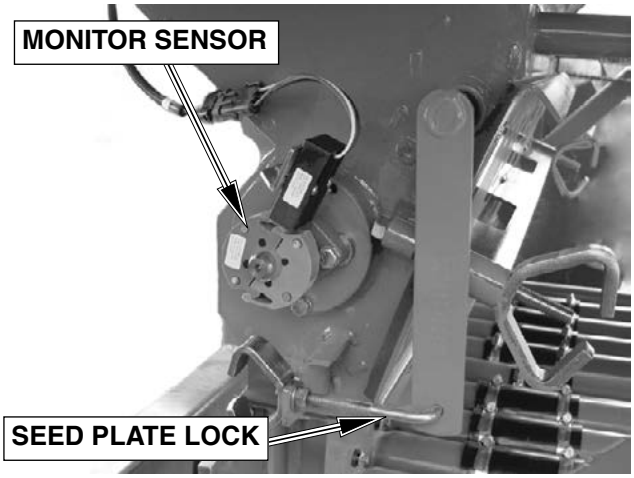

Metering - Continued

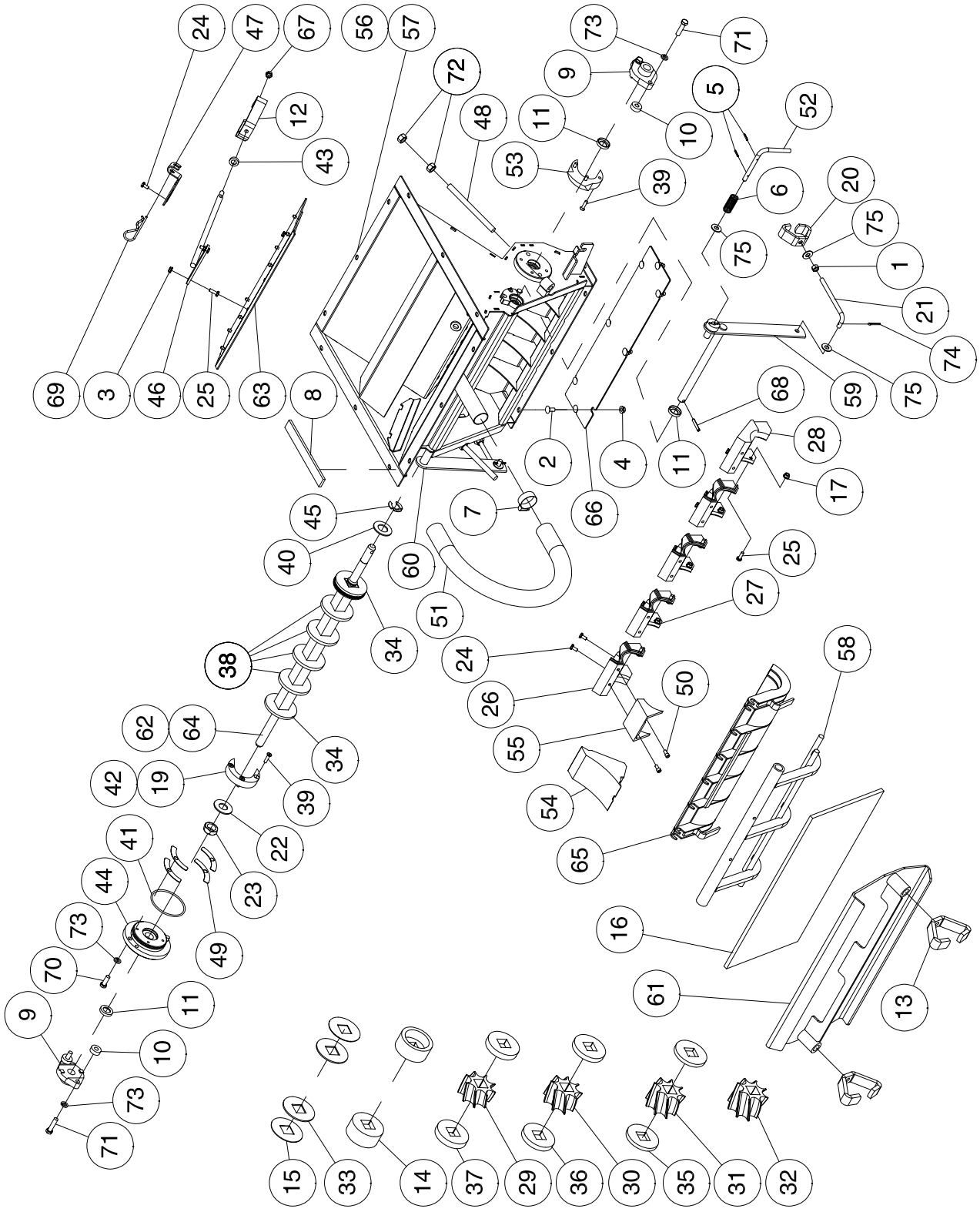

Metering - Continued

Item	Part No.	Description	Qty
1	A47821	Pre-Assembly	1
2	D-5259	Carriage Bolt - 5/16 x 3/4 Lg	8
3	D-5277	Serrated Flange Lock Nut - 1/4	2
4	D-5278	Flange Lock Nut - 5/16	8
5	N11457	Roll Pin - 1/8 Dia x 3/4 Lg	2
6	N11847	Spring	1
7	N11906	Hose Clamp - 1 1/2 Dia	1
8	N15716	Seal Strip 1/4 x 1 (Bulk/Ft)	1
9	N19269	Flange Bearing	2
10	N21602	Spacer - 13/32 ID x 3/8 Thick	4
11	N21659	Seal	4
12	N27350	Wing-Lock Nut - 3/8	1
13	N27360	Wing-Lock Nut - 1/2	2
14	N36106	Blank Wheel Spacer Half	2
15	N36110	Meterwheel Spacer 0.0625	4
16	N36130	Seal Strip	10.75”
17	N36143	Nylon Lock Nut - 1/4	4
18	N36259	Decal - Shut-Off	1
19	N36401	Spacer - End Relief	1
20	N36425	Wing - Lock Nut - 3/8	2
21	N36427	Adjusting Rod	2
22	N36431	Washer - 7/8 ID Stainless Steel	1
23	N36432	Locknut - 7/8 Nylon Insert	1
24	N36556	Hex Bolt - 1/4 x 1/2 Lg	10
25	N36597	Hex Bolt - 1/4 x 3/4 Lg	6
26	N36708	Backplate Left	1
27	N36709	Backplate Center	3
28	N36710	Backplate Right	1
29	N36717	Meterwheel - 7 Outlet	1
30	N36718	Meterwheel - 8 Outlet	1
31	N36719	Meterwheel - 9 Outlet	1
32	N36720	Meterwheel - 10 Outlet	1
33	N36731	Meterwheel Spacer 0.125	4
34	N36732	Meterwheel Spacer 0.25	2
35	N36733	Meterwheel Spacer 0.375	2
36	N36734	Meterwheel Spacer 0.5	2
37	N36735	Meterwheel Spacer 0.625	2
38	N36736	Meterwheel Spacer	4
39	N36738	Hex Socket Cap Screw	6
40	N36744	Washer - 1” ID Stainless Steel	1
41	N36748	O-Ring	1
42	N36749	Right Bearing Assembly	1
43	N36766	Seal - 1/2 In Shaft	1
44	N36774	End Plate	1
45	N36813	Retaining Ring - 1 Dia	1
46	N36945	Shutoff Handle	1
47	N37115	Retainer Clip	1
48	N37120	Rod - 1/2 Dia	2
49	N37210	Shim - Metering Body End Cap	4
50	N37339	Socket Head Capscrew - 1/4 x 1/2	2
51	N38662	Presurization Hose - 1.5 Dia	1
52	N40688	Lock Pin - 3/8 Dia	1
53	N40805	Spacer	1
54	N40980	Blank Run Cover	1
55	N42540	Blank-Off 1 Wide	1
56	N47480	Metering Body Assembly	1
57	N47481	Metering Body	1
58	N47497	Seed Plate Activator	1
59	N47822	Seed Plate Activator Handle	1
60	N47823	Seed Plate Activator Handle	1
61	N47825	Cleanout Door	1
62	N47827	Metershaft - Blank Assy	1
63	N47828	Shutoff Plate	1
64	N47830	Metershaft	1
65	N47831	Seed Plate - Coarse Seeds	1
	N47834	Seed Plate - Coarse Seeds - Teflon Coated	
	N47832	Seed Plate - Medium Seeds	
	N47831	Seed Plate - Fine Seeds	
66	N48482	Cover Plate	1
67	S-748	Hex Jam Nut - 3/8	1
68	S-4781	Spring Pin - 1/4 x 1 1/2	2
69	W-131	Hairpin - 5/32”	1
70	W-475	Hex Bolt - 3/8 x 1 Lg	2
71	W-477	Hex Bolt - 3/8 x 1 1/2 Lg	4
72	W-516	Hex Nut - 1/2	4
73	W-523	Lockwasher - 3/8	6
74	W-528	Cotter Pin - 1/8 x 1 Lg	2
75	W-538	Washer - 7/16 ID x 1 OD x 14 Ga	5
76	W21476	Two Way Locknut - 3/8	2

Metering - Continued

- Tighten locking collars by turning the collars in the direction of the shaft rotation. Lock the collar by tapping the collar with a punch in the direction of rotation of the shaft.
- Reinstall the monitor donut on shaft. Ensure donut is centred to pick-up. Set the gap between the pick-up and the donut at 0.030” (0.76 mm).
- Attach meter shaft coupler over the meter shaft and transmission drive shaft.
- Install the 1/4” x 2 1/4” special bolt with two flatwashers and locknuts. **Tighten locknuts to bottom of threads.**
- Install **Correct** seed plate for product being metered.

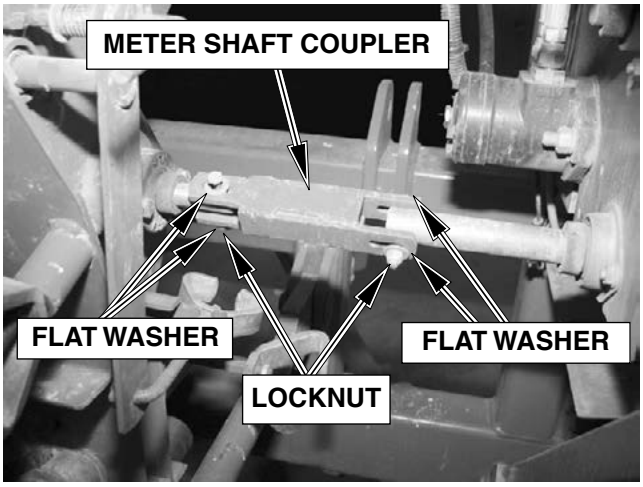

Seed Plate Adjustment

- **Remove** meter shaft from the meter body.
- Install the seed plate and adjust the seed plate locks so that the bottom of the seed plate comes against the bottom of the rear back plate. Tighten nuts so that the surface of the flatwashers are against the bracket.
- Remove the seed plate and set aside.
- Install meter shaft assembly, snap ring end first into meter body.
- Install ‘O’ Ring onto meter shaft end plate.

Note: Apply thin layer of lubricant on ‘O’ Ring.

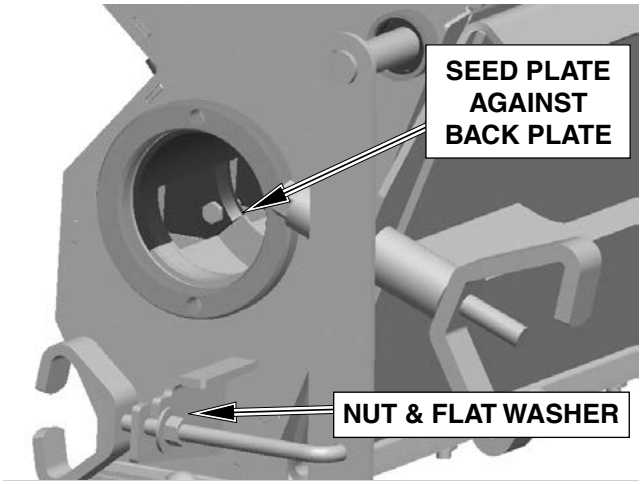

Seed Plate Adjustment

Metering - Continued

Blank Off Installation

Proper fit between the Blank Off and the spacer on the meter roller is important.

To ensure correct installation of the Blank Off follow the procedures listed below:

- Loosely install the Blank Off covers using (2) 1/4” Hex Socket bolts over the top of **all** the Blanked Off runs.
- Hold in place on top/back side of the Blank Off to align the radius with meter roller while tightening capscrews.
- Tighten capscrews starting with the left screw when facing body.

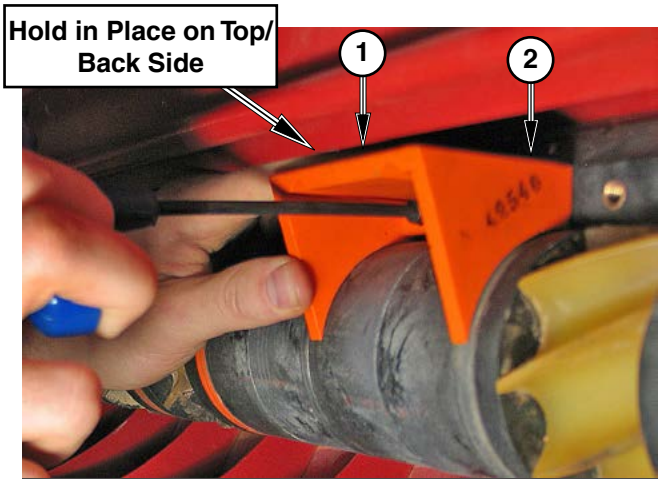

Blank Off Installation Procedure

Correctly Installed Blank Off

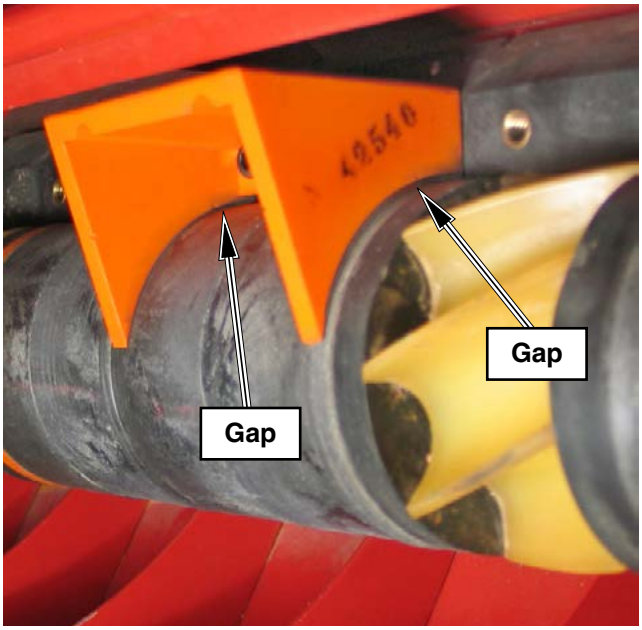

Incorrectly Installed Blank Off

Opener Maintenance

Bushing Replacement

In the event the pivot pin bushings need replacing, use the following procedure.

- Turn "Operating" valve out to bleed off/service position and **relieve all pressure** from the accumulator circuit using the tractor remote.
- Shut tractor engine off and ensure park brake is engaged before proceeding.
- Place "Openers" ball valve into locked position to prevent accidental oil flow to openers.
- Once the pressure is off of the accumulator circuit, opener can be disassembled as illustrated in diagram on the following page.

Reverse the above procedure to reassemble trip.

Note: Bleed air from hydraulic circuit before using unit. Refer to "Bleeding Hydraulic System" for details.

Cylinder Replacement

In the event the opener cylinder needs repair or replacing, use the following procedure.

- Turn "Operating" valve out to bleed off/service position and **relieve all pressure** from the accumulator circuit by placing the tractor remote in "float" position.
- Shut tractor engine off and ensure park brake is engaged before proceeding.
- Place "Openers" ball valve into locked position to prevent accidental oil flow to openers.
- Once the pressure is off of the accumulator circuit, disconnect hydraulic hoses from opener cylinder.
- Refer to diagram on following page to remove the pins from the opener cylinder.
- Remove the cylinder. Repair or replace cylinder as necessary.

Reverse the above procedure to reassemble trip.

Note: Bleed air from hydraulic circuit before using unit. Refer to "Bleeding Hydraulic System" for details.

Warning

HIGH-PRESSURE FLUID HAZARD

To prevent serious injury or death:

- **Relieve pressure on hydraulic system before servicing or disconnecting hoses.**
- **Wear proper hand and eye protection when searching for leaks. Use wood or cardboard instead of hands.**
- **Keep all components in good repair.**

Warning

CRUSHING HAZARD

To prevent serious injury or death:

- **Stand clear - openers move rapidly under hydraulic pressure.**
- **Place valve in service position.**
- **Relieve pressure on hydraulic system before servicing.**
- **Lower openers to ground before adjusting depth.**
- **Shut tractor off and remove key.**

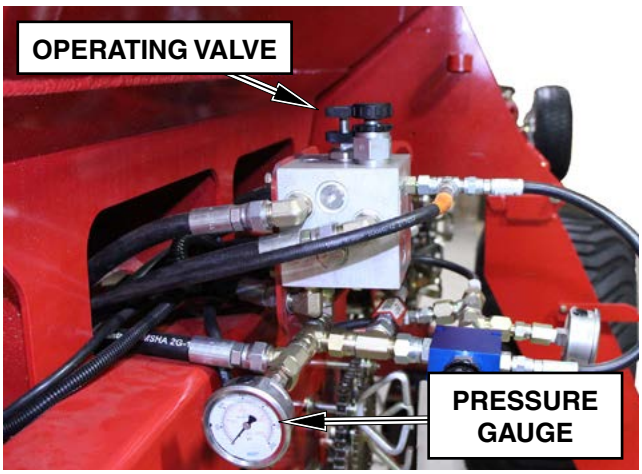

Opener Maintenance - Continued

Shank Replacement

In the event a shank needs replacing, use the following procedure.

- Turn “Operating” valve out to bleed off/service position and **relieve all pressure** from the accumulator circuit by placing the tractor remote in “float” position.
- Shut tractor engine off and ensure park brake is engaged before proceeding.
- Place “Openers” ball valve into locked position to prevent accidental oil flow to openers.
- Once the pressure is off of the accumulator circuit, remove retaining bolts from shank holder. See diagram on previous page.
- Remove shank from shank holder.
- Remove opener from shank.
- Reverse above procedure to reassemble.

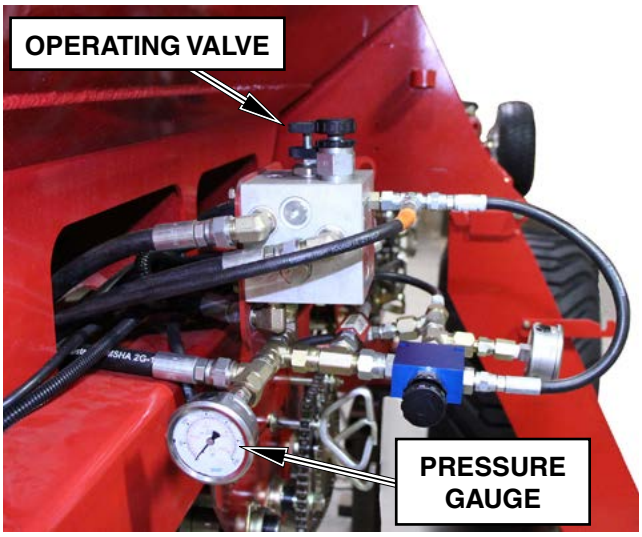

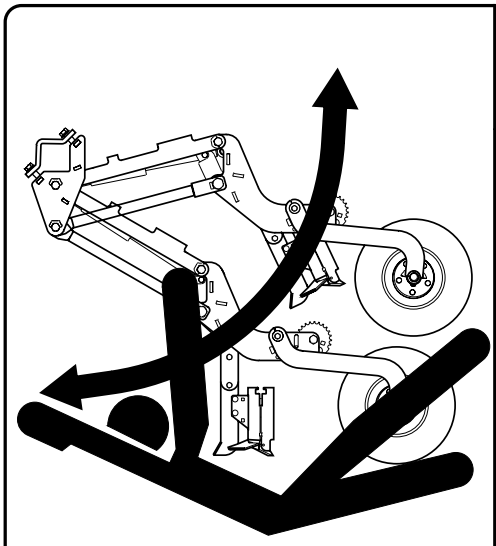

WARNING

CRUSHING HAZARD

To prevent serious injury or death:

- **STAND CLEAR - openers move rapidly under hydraulic pressure.**
- **Before servicing hydraulics - Place "System" valve in service position and relieve pressure from hydraulic system.**
- **Shut tractor off and remove key before servicing or adjusting depth.**
- **Place "Openers" valve in locked position before adjusting depth or transporting.**

Opener Maintenance - Continued

Opener Body Assembly

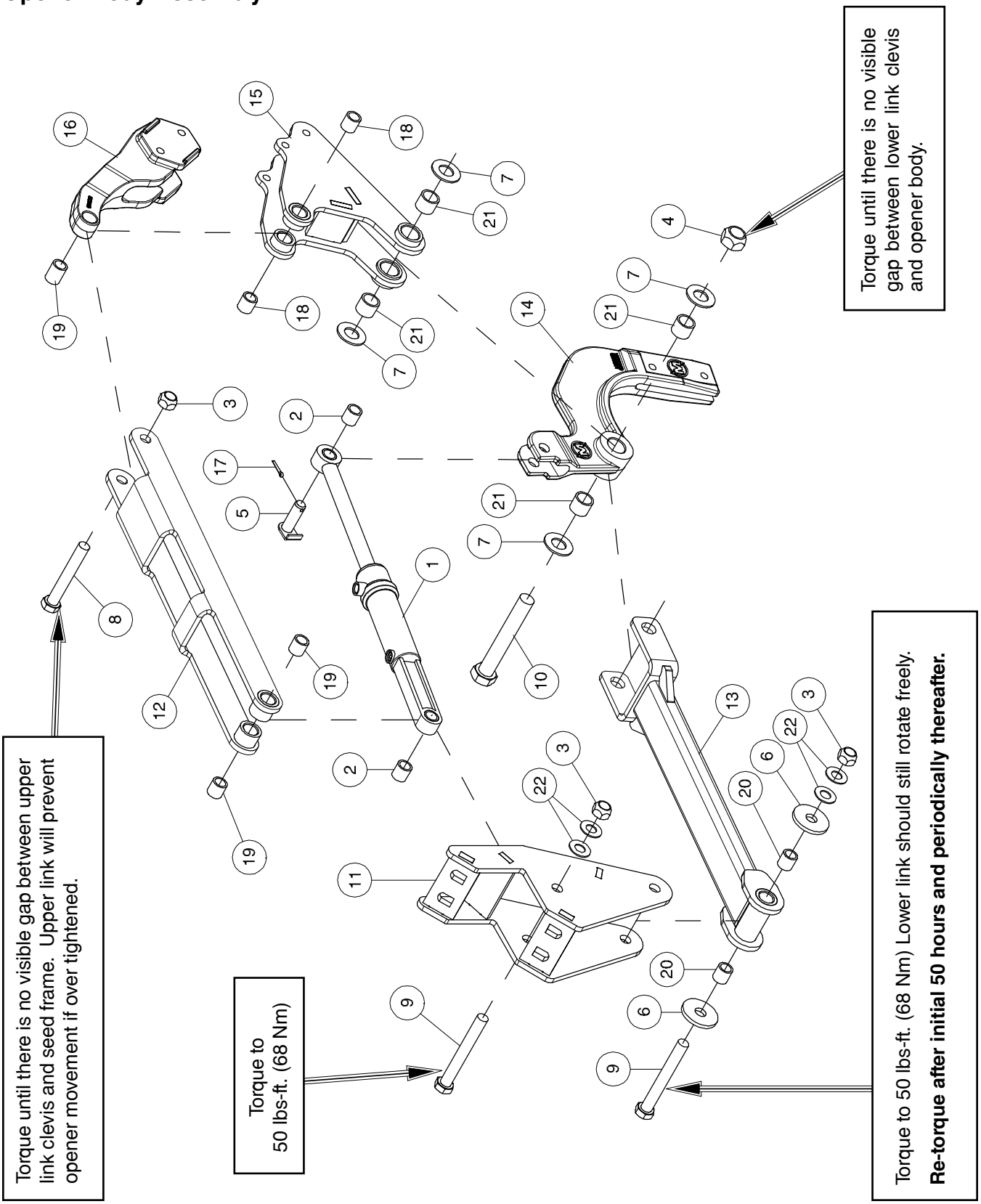

Opener Maintenance - Continued

Opener Body Assembly

Item	Part No.	Description	Qty
1	C51033	Hydraulic Cylinder - 1 3/4 Bore x 4 Stroke	1
2	S51494	Bushing - 0.756/0.759 ID x 1.003/1.005 OD x 1.000 Lg	2
3	D-5273	Locknut - 3/4 Unitorque	3
4	D-5274	Locknut - 1 Unitorque	1
5	S58730	Pin Chrome - 3/4 x 1 29/32 UL	1
6	S42674	Washer - 2 1/2 OD x 25/32 ID x 1/4	2
7	S42675	Washer - 1 1/32 ID x 2 OD x 1/8	4
8	S51004	Hex Bolt - 3/4 x 5 1/8 Lg GR-8	1
9	S51006	Hex Bolt - 3/4 x 6 1/4 Lg GR-8	2
10	S42952	Hex Bolt - 1 x 6 5/8 Lg	1
11	S58748	Mounting Bracket	1
12	S59801	Top Link (Includes item 19)	1
13	S59802	Lower Link (Includes item 20)	1
14	S59804	Shankholder - Cast (Includes item 21)	1
15	S59803	Opener Body (Includes item 18 & 21)	1
16	S59807	Packer Arm Pivot Bracket - Cast (Includes item 19)	1
17	W-530	Cotter Pin - 5/32 x 1 Lg	1
18	S58744	Q2 Bushing - 3/4 ID x 1 OD x 1 Lg Nominal size	2
19	S58746	Q2 Bushing - 3/4 ID x 1 OD x 1.313 Lg Nominal size	3
20	S58747	Q2 Bushing - 3/4 ID x 1 OD x 1.875 Lg Nominal size	2
21	S59806	Q2 Bushing - 1 ID x 1 1/4 OD x 1 Lg Nominal size	4
22	W-476	Flatwasher - 13/16 ID x 1 1/2 OD x 11 Ga	4
	S59800	Base Assembly (Includes all itmes above)	1

Note: Openers should drop to the ground under their own weight, when the tractor remote is placed into float position relieving oil pressure.

If it requires pressure to push an opener down to the ground during this procedure, one or more of the pivot bolts are over tightened.

Check and adjust pivot bolts as required.

Important

Turn "Operating" valve out to "Bleed Off/Service" position and remove all pressure from hydraulic systems before attempting any service work on hydraulic components.

Hydraulic system must be bled after it has been serviced (if any portion of the system has been opened to atmosphere)

Opener Maintenance - Continued

Opener Assembly

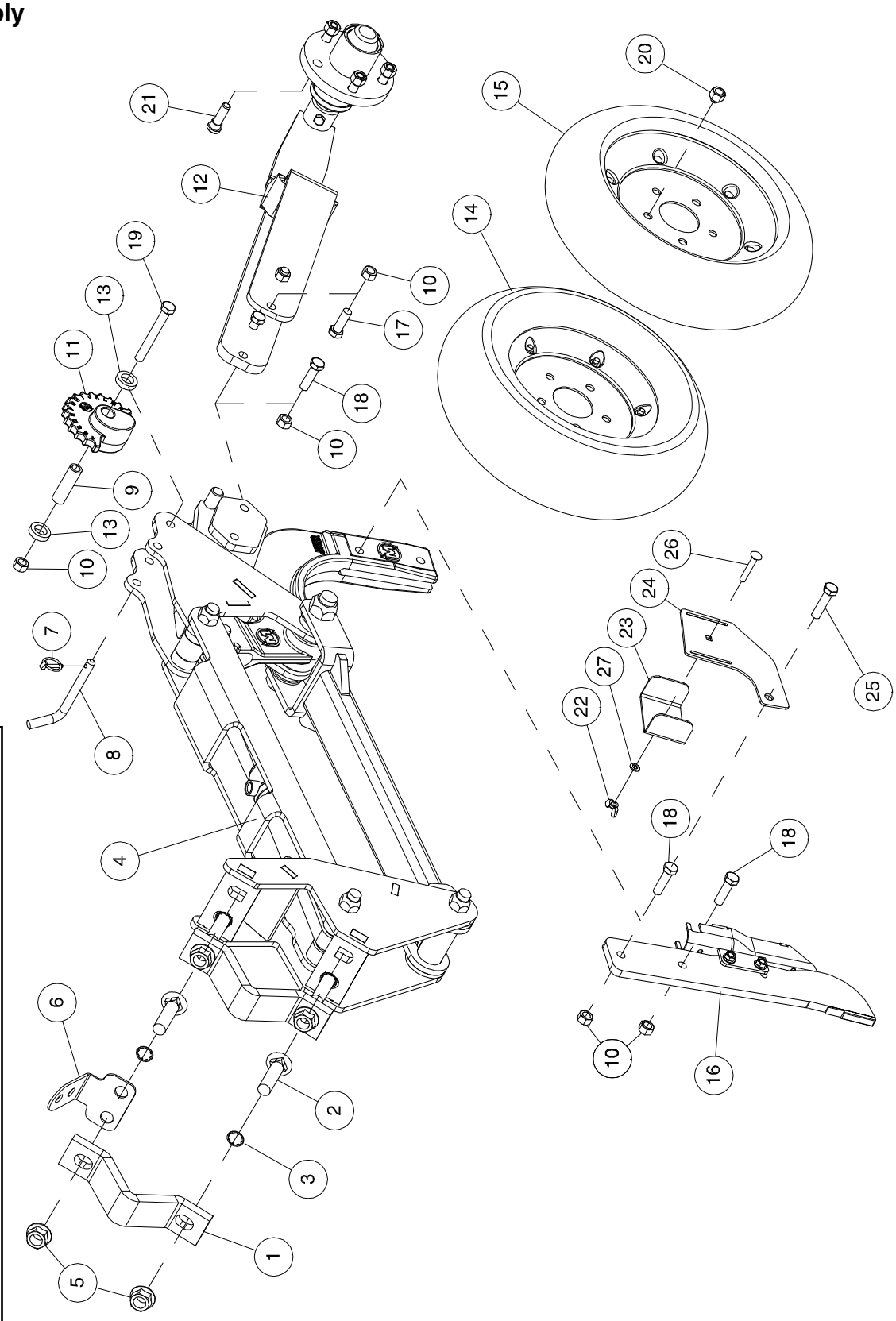

Important

Torque Locknuts (5) to 220 ft. lbs. (298 Nm)
Re-torque locknuts (5) after
initial 50 hours and periodically thereafter.

Opener Maintenance - Continued

Opener Assembly

Item	Part No.	Description	Qty
1	C26506	Clamp Strap	2
2	C33957	Carriage Bolt - 3/4 x 3 Lg	4
3	C33958	Retaining Ring	4
4	S48860	Base Assembly - See Next Page	1
5	D12942	Serrated Flange Lock Nut - 3/4	4
6	S47976	Hose Holder	1
7	S42294	Lynch Pin - 3/16 Dia x 1/14 Lg	1
8	S42659	Depth Pin - 1/2 Dia x 3 1/2 UL	1
9	S44402	Bushing - 0.510 ID x 0.750 OD x 2 9/16 Lg	1
10	S47110	Center Lock Hex Nut - 1/2	7
11	S49260	Depth Adjustment Cam	1
12	S49500	Packer Arm Assembly	1
13	S49516	Spacer Washer - 25/32 ID x 1 1/4 OD x 5/16 thick	2
14	S49520	Otico Tire - 5 1/2	1
15	S49521	Otico Tire - 4 1/2	1
16	S49538	Single Shoot Knife	1
17	W-486	Hex Bolt - 1/2 x 1 1/2 Lg	2
18	W-487	Hex Bolt - 1/2 x 1 3/4 Lg	4
19	W-495	Hex Bolt - 1/2 x 4 Lg	1
20	S50246	Tapered Wheel Nut - 1/2-20 UNF	5
21	S50247	Press-In Wheel Stud - 1/2-20 UNF x 1 3/4 Lg	5
22	N31016	Wing Nut - 5/16	1
23	S51330	Hose Holder Clamp	1
24	S51463	Hose Holder	1
25	S51464	Hex Bolt - 1/2 x 2 Lg Gr. 8	1
26	S51466	Carriage Bolt - 5/16 x 2 Lg	1
27	W-522	Lockwasher - 5/16	1
	S46595	Optional Secondary Hose Holder Kit - (Includes Items 22 - 27)	

Important

Turn "Operating" valve out to "Bleed Off/Service" position and remove all pressure from hydraulic systems before attempting any service work on hydraulic components.

Hydraulic system must be bled after it has been serviced (if any portion of the system has been opened to atmosphere)

Opener Maintenance - Continued

Opener Assembly - Continued

Single Shoot Boot

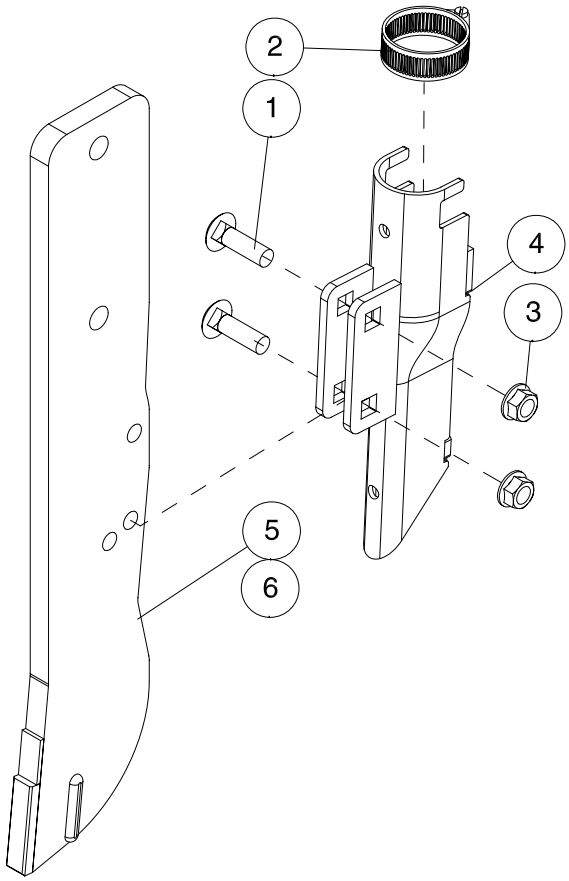

Item	Part No.	Description	Qty
1	D-5260	Carriage Bolt - 3/8 x 1-1/2 Lg	2
2	N11470	Hose Clamp	1
3	S27987	Center Lock Flange Lock Nut - 3/8	2
4	S42865	Single Shoot Boot	1
5	S45464	Wear Shank W/Carbide	1
6	S49538	Single Shoot Knife Kit (Contains Items 1, 3, 4 and 5)	1

Opener Maintenance - Continued

Opener Assembly - Continued

Single Shoot Boot - 3” Spread

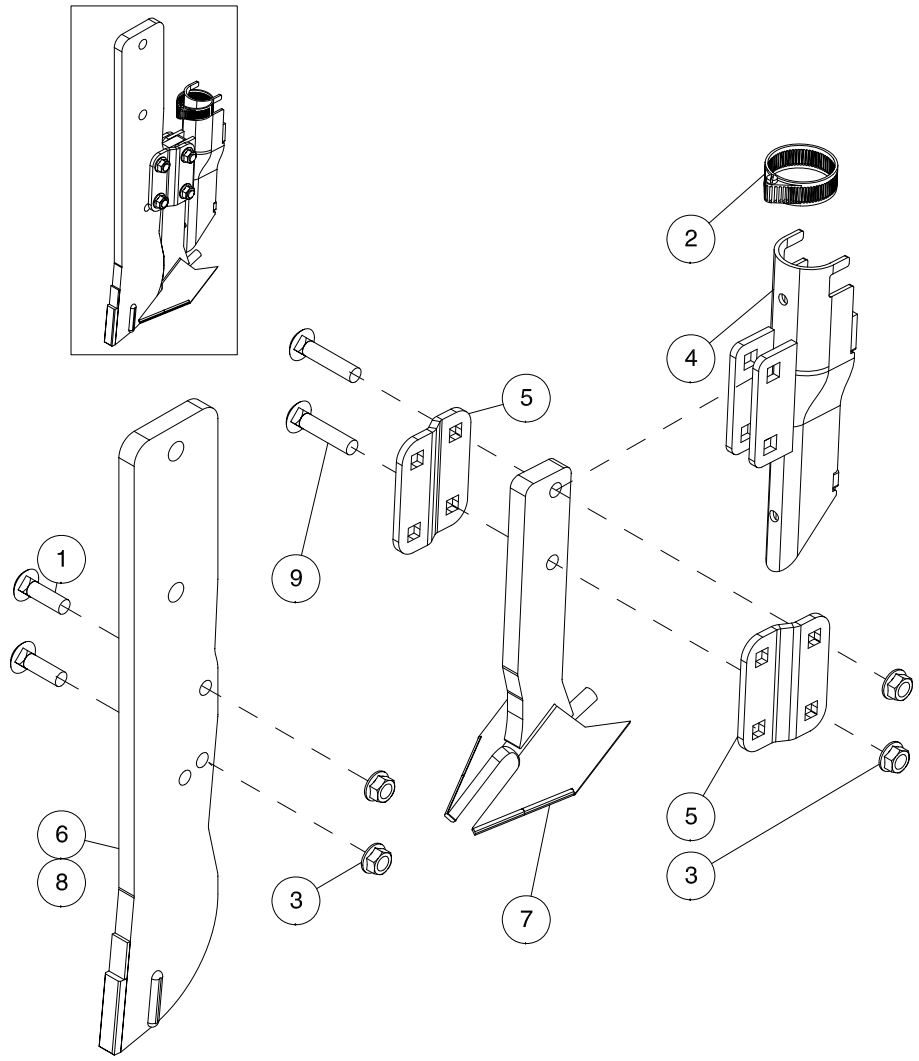

Item	Part No.	Description	Qty
1	D-5260	Carriage Bolt - 3/8 x 1-1/2 Lg	2
2	N11470	Hose Clamp	1
3	S27987	Center Lock Flange Lock Nut - 3/8	4
4	S42865	Single Shoot Boot	1
5	S45269	Mounting Plate	2
6	S45464	Wear Shank W/Carbide	1
7	S47337	3” Wear Shovel	1
8	S49540	Single Shoot 3” Spreader Kit (Includes Items 1, 3, 4, 5, 6, 7 and 9)	1
9	S31980	Carriage Bolt - 3/8 x 1-3/4 Lg	2

Opener Maintenance - Continued

Opener Assembly - Continued

Double Shoot Boot Shown

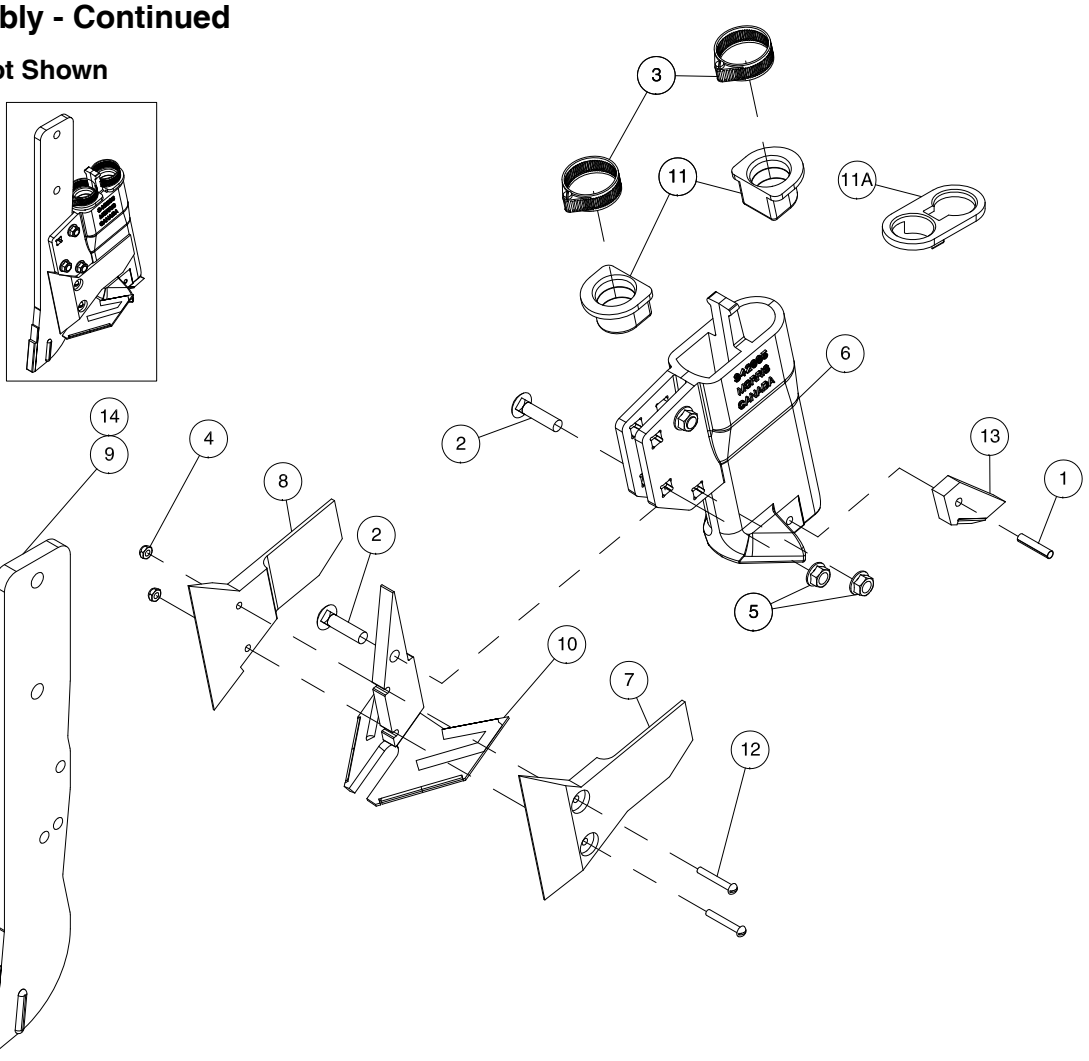

Item	Part No.	Description	Qty
1	D-5243	Roll Pin	1
2	D-5261	Carriage Bolt - 3/8 x 1-1/2 Lg	3
3	N11470	Hose Clamp	2
4	N37787	Nylon Insert Locknut - #10-24	2
5	S27987	Center Lock Flange Lock Nut - 3/8	3
6	S42965	Cast Double Shoot Boot	1
7	S45312	Mud Guard Option Left	1
8	S45313	Mud Guard Option Right	1
9	S45464	Wear Shank W/Carbide	1
10	S45470	Paired Row Shovel	1
11	S47076	Secondary Hose Grommet - Option - 15/16 ID Hose	2
11A	S50245	Secondary Hose Grommet - Option - 1.125 ID Hose	
12	S47128	Machine Screw - #10-24 x 1 3/8	2
13	S47980	Carbide Wear Tail	1
14	S49539	Paired Row Shovel Kit (Includes Items 1, 2, 5, 6, 9, 10, and 13)	1
	S46181	Kit - Mud Guards (Includes Items 4, 7, 8, and 12)	

Opener Maintenance - Continued

Opener Assembly - Continued

IP Paired Row Kit

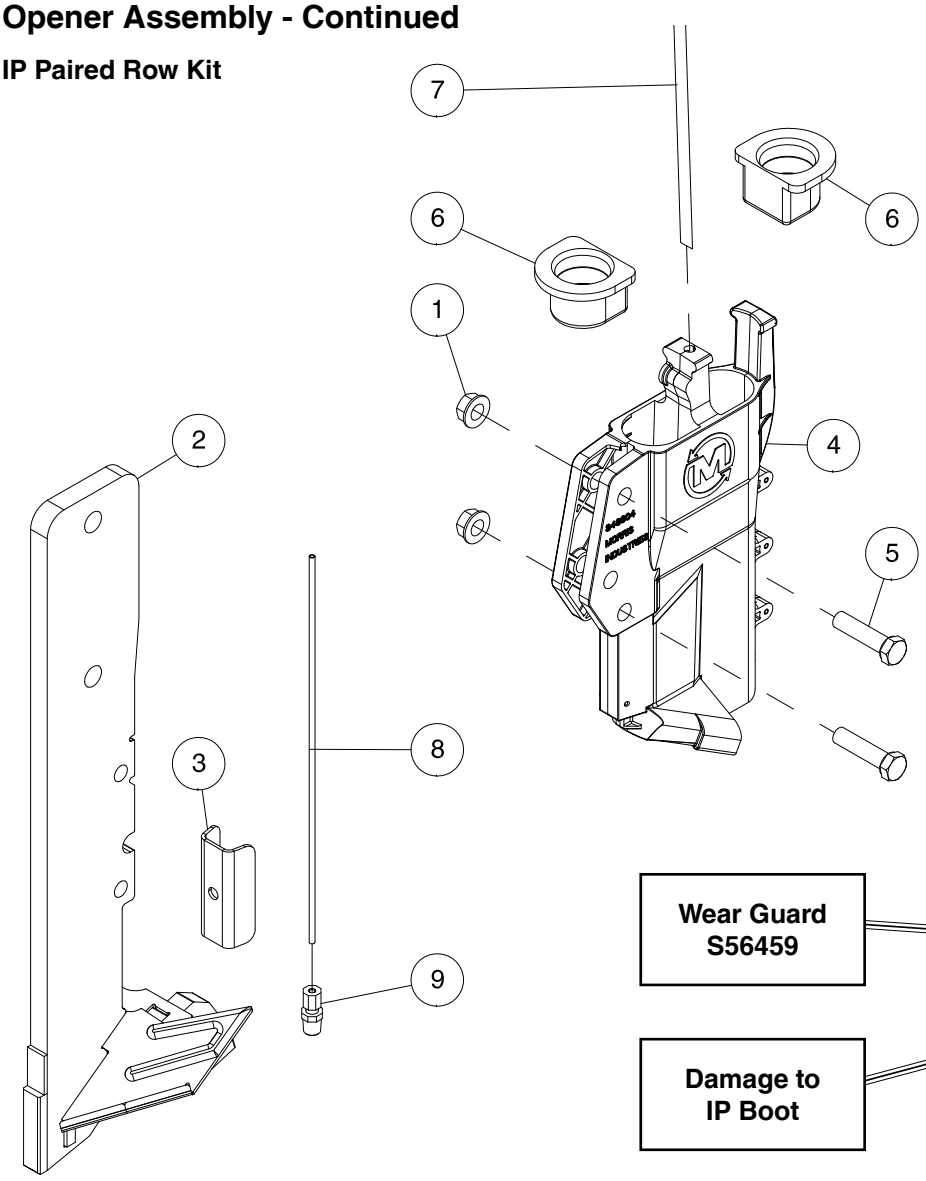

Important

Check Wear Guards regularly and replaced before the IP Boot is damaged.

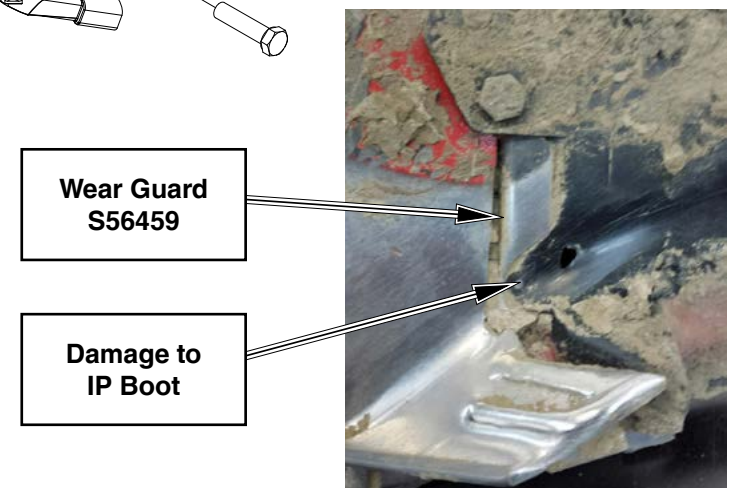

Item	Part No.	Description	Qty
1	S27987	Lock Nut - 3/8 Flange W/Center Lock	2
2	S55455	Paired Row Shank	1
3	S56459	Wear Guard	1
4	S56485	IP (Injected Polymer) Paired Row Seed Boot	1
5	W-477	Hex Bolt - 3/8 x 1 1/2 Lg.	2
6	S47076	Secondary Hose Grommet - Option - 15/16 ID Hose	2
7		Liquid Tube - 1/4 OD - See Liquid Kit Supplier for Tube	1
8		Injector Tube - 1/8 OD - See NH3 Kit Supplier for Tube	1
9	S48814	Compression Fitting - 1/8 x 1/8	1
	S56550	IP Paired Row Boot Kit (Contains Items 1, 2, 3, 4 & 5)	1

Opener Maintenance - Continued

Opener Assembly - Continued

IP Left Side Band Kit

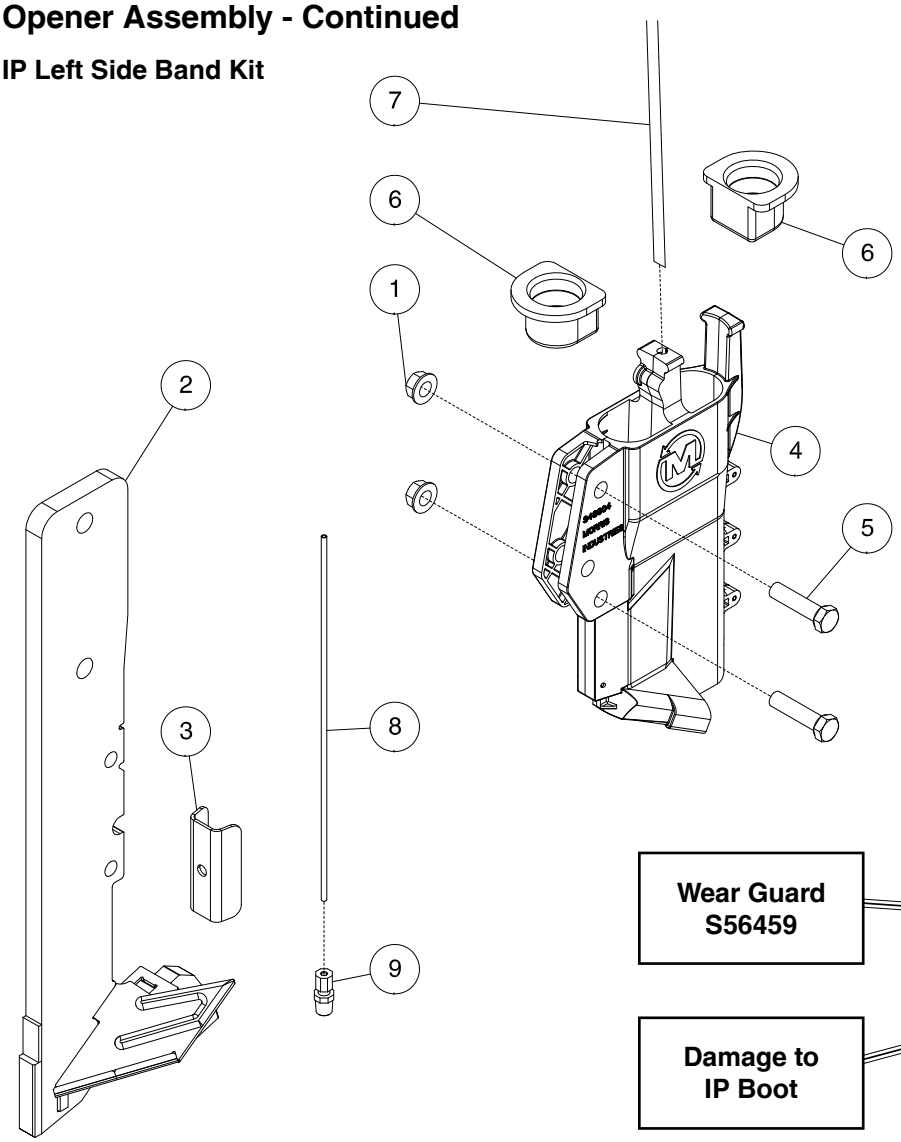

Important

Check Wear Guards regularly and replaced before the IP Boot is damaged.

Mount the side band openers with the deflector and seed tube facing the center of the Contour Air Drill.

Item	Part No.	Description	Qty
1	S27987	Lock Nut - 3/8 Flange W/Center Lock	2
2	S55460	Sideband Shank - Left	1
3	S56459	Wear Guard	1
4	S56482	IP (Injected Polymer) Left Sideband Seed Boot	1
5	W-477	Hex Bolt - 3/8 x 1 1/2 Lg	2
6	S47076	Secondary Hose Grommet - Option - 15/16 ID Hose	2
7		Liquid Tube - 1/4 OD - See Liquid Kit Supplier for Tube	1
8		Injector Tube - 1/8 OD - See NH3 Kit Supplier for Tube	1
9	S48814	Compression Fitting - 1/8 x 1/8	1
	S56551	IP Left Sideband Boot Kit (Contains Items 1, 2, 3, 4 & 5)	1

Opener Maintenance - Continued

Opener Assembly - Continued

IP Right Side Band Kit

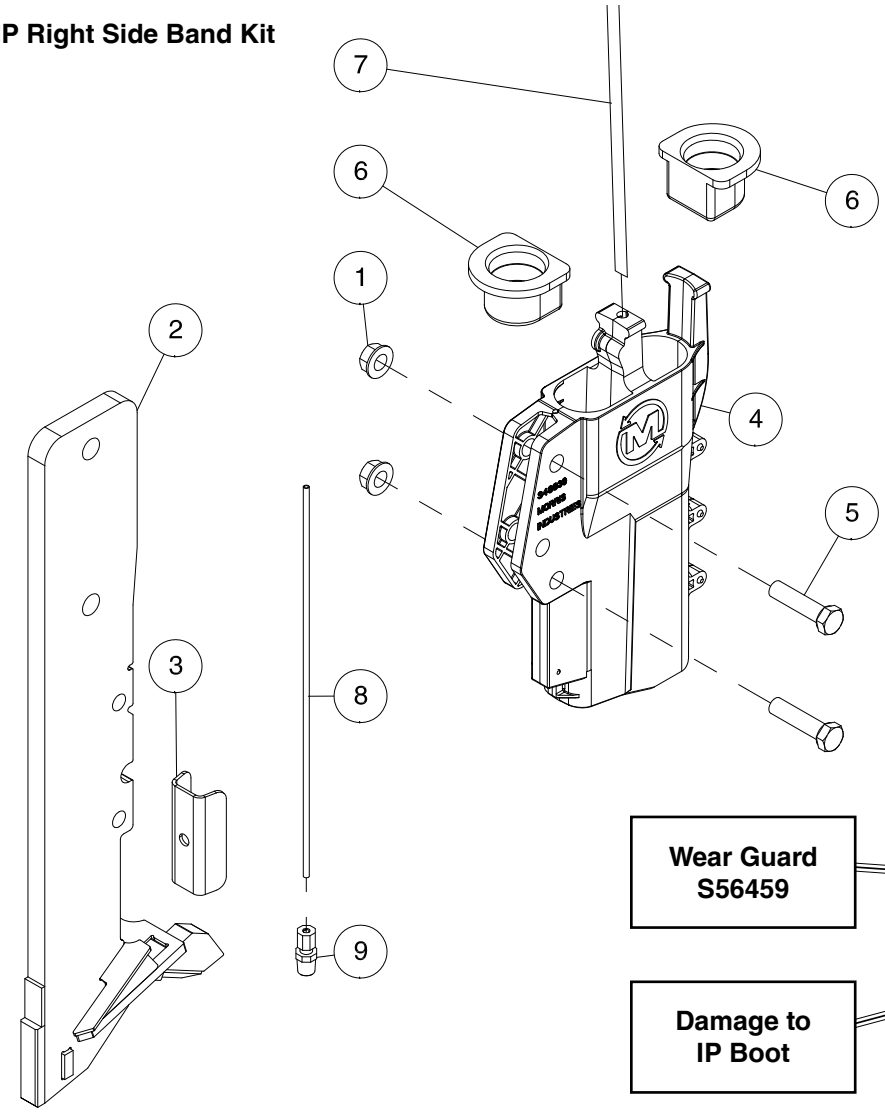

Mount the side band openers with the deflector and seed tube facing the center of the Contour Air Drill.

Important

Check Wear Guards regularly and replaced before the IP Boot is damaged.

Item	Part No.	Description	Qty
1	S27987	Lock Nut - 3/8 Flange W/Center Lock	2
2	S55465	Sideband Shank - Left	1
3	S56459	Wear Guard	1
4	S56483	IP (Injected Polymer) Right Sideband Seed Boot	1
5	W-477	Hex Bolt - 3/8 x 1 1/2 Lg.	2
6	S47076	Secondary Hose Grommet - Option - 15/16 ID Hose	2
7		Liquid Tube - 1/4 OD - See Liquid Kit Supplier for Tube	1
8		Injector Tube - 1/8 OD - See NH3 Kit Supplier for Tube	1
9	S48814	Compression Fitting - 1/8 x 1/8	1
	S56552	IP Right Sideband Boot Kit (Contains Items 1, 2, 3, 4 & 5)	1

Opener Maintenance - Continued

Opener Assembly - Continued

Side Band Boot - Left Shown

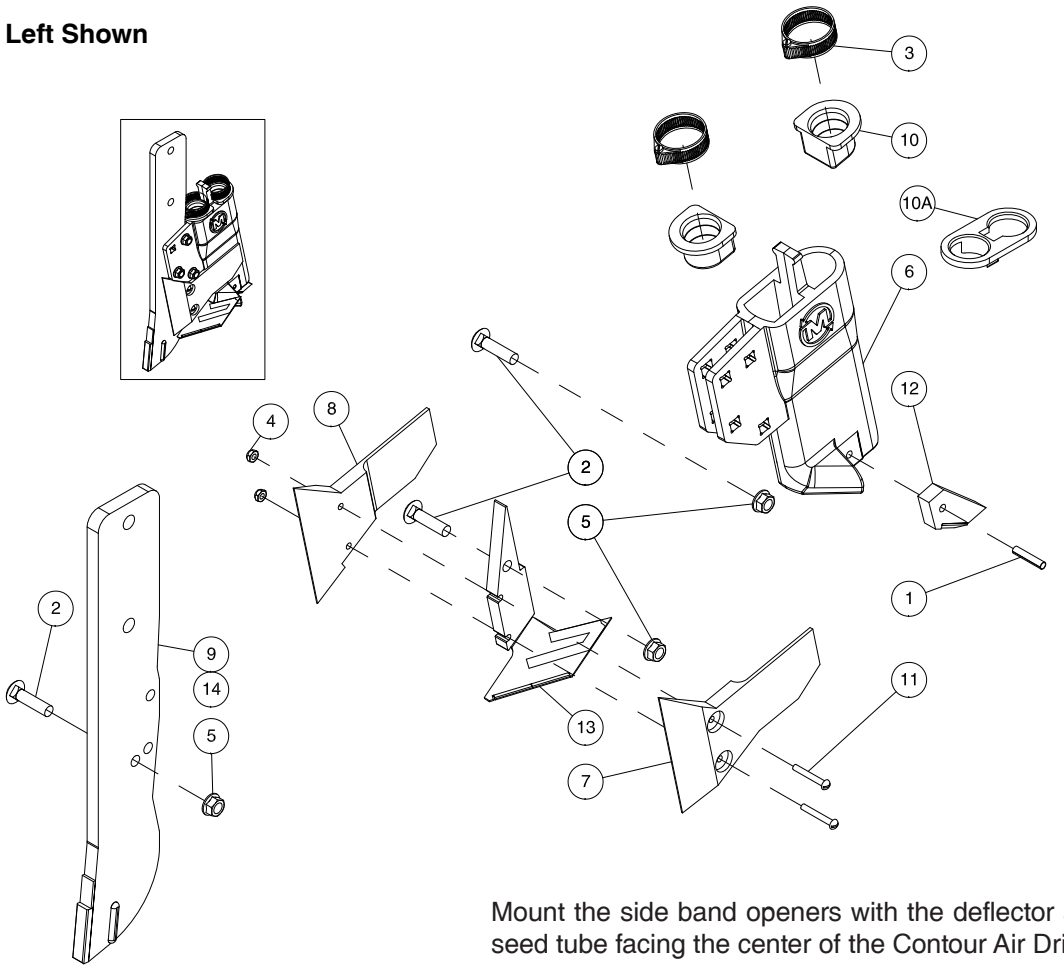

Mount the side band openers with the deflector and seed tube facing the center of the Contour Air Drill.

Item	Part No.	Description	Qty
1	D-5243	Roll Pin	1
2	D-5261	Carriage Bolt - 3/8 x 1-1/2 Lg	3
3	N11470	Hose Clamp	2
4	N37787	Nylon Insert Locknut - #10-24	2
5	S27987	Center Lock Flange Lock Nut - 3/8	3
6	S44977	Cast Double Shoot Boot - Side Band - Left	1
6A	S51469	Cast Double Shoot Boot - Side Band - Left - **Carbide**	
7	S45312	Mud Guard Option Left	1
8	S45313	Mud Guard Option Right	1
9	S45464	Wear Shank W/Carbide	1
10	S47076	Secondary Hose Grommet - Option - 15/16 ID Hose	2
10A	S50245	Secondary Hose Grommet - Option - 1.125 ID Hose	
11	S47128	Machine Screw - #10-24 x 1-3/8	2
12	S47980	Carbide Wear Tail	1
13	S49536	Side Band Shovel	1
14	S49541	Side Band Left Kit (Includes Items 1, 2, 5, 6, 9, 12, and 13)	1
	S55275	Side Band Left Kit (Includes Items 1, 2, 5, **6A**, 9, 12, and 13)	
	S46181	Kit - Mud Guards (Includes Items 4, 7, 8, and 11)	

Opener Maintenance - Continued

Opener Assembly - Continued

Side Band Boot - Right Shown

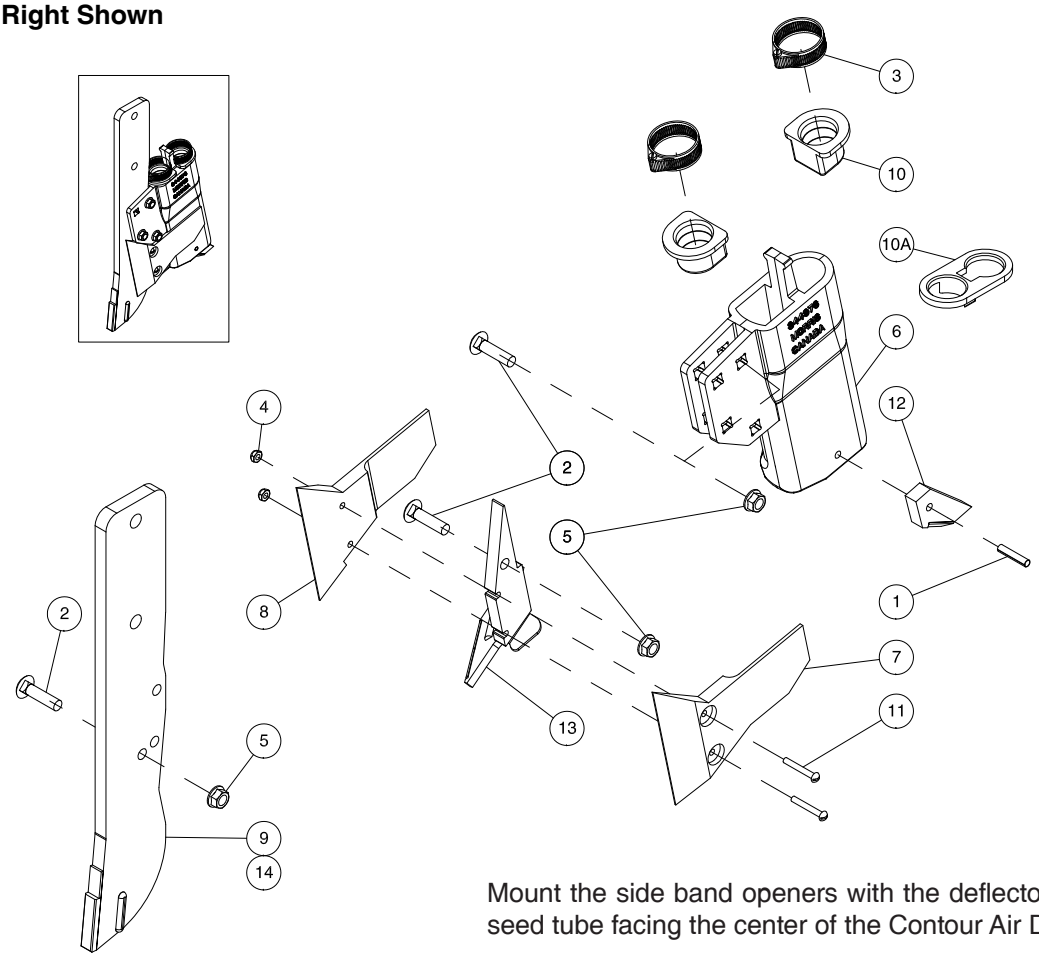

Mount the side band openers with the deflector and seed tube facing the center of the Contour Air Drill.

Item	Part No.	Description	Qty
1	D-5243	Roll Pin - 1/4 x 1 1/4 Lg	1
2	D-5261	Carriage Bolt - 3/8 x 1-1/2 Lg	3
3	N11470	Hose Clamp	2
4	N37787	Nylon Insert Locknut - #10-24	2
5	S27987	Center Lock Flange Lock Nut - 3/8	3
6	S44976	Cast Double Shoot Boot - Side Band - Right	1
6A	S51470	Cast Double Shoot Boot - Side Band - Right - **Carbide**	
7	S45312	Mud Guard Option Left	1
8	S45313	Mud Guard Option Right	1
9	S45464	Wear Shank W/Carbide	1
10	S47076	Secondary Hose Grommet - Option - 15/16 ID Hose	2
10A	S50245	Secondary Hose Grommet - Option- 1.125 ID Hose	
11	S47128	Machine Screw - #10-24 x 1-3/8	2
12	S47980	Carbide Wear Tail	1
13	S49537	Side Band Shovel - Right	1
14	S49542	Side Band Right Kit(Includes Items 1, 2, 5, 6, 9, 12, and 13)	1
	S55274	Side Band Right Kit(Includes Items 1, 2, 5, **6A**, 9, 12, and 13)	1
	S46181	Kit - Mud Guards (Includes Items 4, 7, 8, and 11)	

Opener Maintenance - Continued

Bleeding Hydraulic System

If hydraulic system has been serviced air will need to be bleed out of system as follows:

To bleed hydraulic system of air:

- Lift openers up and lock tractor remote in lift position.
- With tractor hydraulics operating, open bleed-off ball valves on end of drill wings.
- Allow oil to cycle for a few minutes then change direction of tractor remote to lower openers and cycle for a few more minutes.
- Close bleed-off ball valves and lift openers up.
- Repeat above procedure for a second time.
- Close bleed-off ball valves and lift openers up.
- Lock “Openers” valve and check to see that openers stay firmly in position.
- If openers are spongy repeat procedure until air is gone.

Warning

HIGH-PRESSURE FLUID HAZARD

To prevent serious injury or death:

- **Relieve pressure on hydraulic system before servicing or disconnecting hoses.**
- **Wear proper hand and eye protection when searching for leaks. Use wood or cardboard instead of hands.**
- **Keep all components in good repair.**

Important

Turn “Operating” valve out to “Bleed Off/ Service” position and remove all pressure from hydraulic systems before attempting any service work on hydraulic components.

Hydraulic system must be bled after it has been serviced (if any portion of the system has been opened to atmosphere)

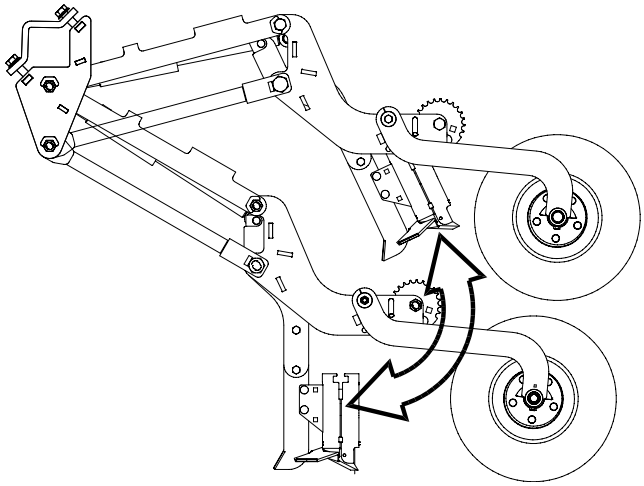

Opener Maintenance - Continued

Hydraulic System Trouble Shooting

If pressure can not be maintained in the hydraulic system, or openers drop rapidly from transport position, a leaky hydraulic cylinder (bypassing oil across the piston seal) may be present. To locate a hydraulic leak in the Contour Air Drill hydraulic system, the following procedure can be used:

1. Remove pressure from the hydraulic system.
2. Check the drill frame and hoses to make sure that the leak is not external (leaking oil out of the circuit).
3. Lift the contour openers into their raised position.
4. Lock the hydraulic ball valve marked “OPENERS”.
5. Watch the openers carefully across the drill and locate the first opener(s) to visibly drop down from the raised position (NOTE: This is the general area of the leaking cylinder, but the first opener to drop is not always the leaking cyinder.).
6. Unlock the “OPENERS” hydraulic ball valve and lift the openers to the raised position and lock the hydraulic remote in the raised position to apply flow to the circuit for about five minutes.
7. Let the hydraulic remote go back to neutral, shut off the tractor, and then go and check the temperature of the opener cylinders by feeling the cylinder barrels. Start at the group of cylinders that were located in step 5) and then work from the outer openers in to center until a “hot” cylinder is located.
8. Under normal conditions the cylinders should remain cool (ambient temperature or slightly above); the opener with a “hot” cylinder barrel has the leaky seal and should be serviced or replaced.

NOTE: All hydraulic cylinders have a natural leakage rate. The openers on the contour drill will drop over a long period of time during storage; this is normal. Only check for leaky cylinders if accumulator system pressure drops rapidly during operation or openers drop rapidly from transport in a short period of time.

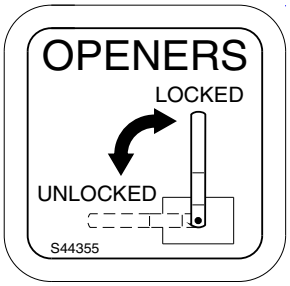

DECAL - S44355

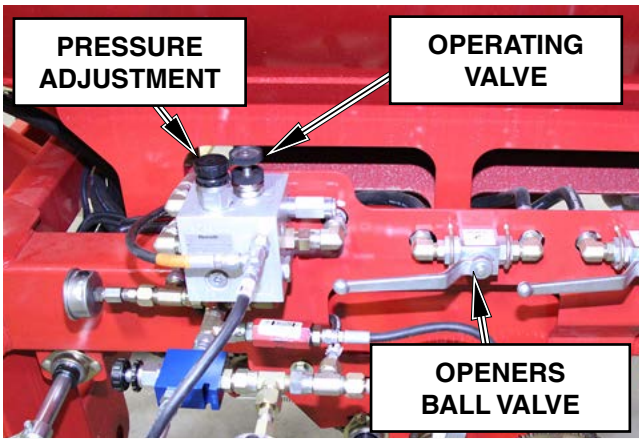

Valve Locations

Hydraulics

Refer to Section 1 regarding hydraulic safety. In addition:

- Inspect hydraulic system for leaks, damaged hoses and loose fittings.
- Damaged hoses and hydraulic tubing can only be repaired by replacement. DO NOT ATTEMPT REPAIRS WITH TAPE OR CEMENTS. High pressure will burst such repairs and cause system failure and possible injury.
- Always place "Operating" valve into service position and relieve hydraulic pressure from the system before performing maintenance or repairs.

Note: Accumulator can store pressure even when disconnected from tractor.

- Leaking cylinders - install a new seal kit.
- Fittings - use liquid Teflon on all NPT hydraulic joints. **Do not use liquid Teflon or Teflon tape on JIC or ORB ends.**
- Hydraulic Hose Connections - when connecting the hoses to the cylinders, tubing, etc. always use one wrench to keep the hose from twisting and another wrench to tighten the union. Excessive twisting will shorten hose life.
- Keep fittings and couplers clean.
- Check the Tractor Manual for proper filter replacement schedule.

Refer to the Trouble Shooting Section.

MORRIS Industries Ltd.

Contact your nearest Dealer for genuine repair parts. Dealers carry ample stocks and are backed by the manufacture and regional associations.

⚠ Caution

Dirt in the hydraulic system could damage O-rings, causing leakage, pressure loss and total system failure.

Note: Extreme care must be taken to maintain a clean hydraulic system. Use only new hydraulic fluid when filling reservoir.

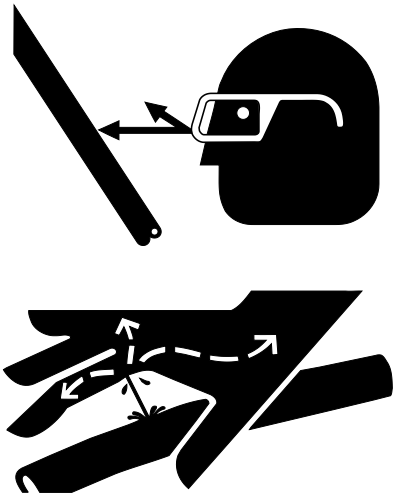

⚠ Warning

HIGH-PRESSURE FLUID HAZARD

To prevent serious injury or death:

- **Relieve pressure on hydraulic system before servicing or disconnecting hoses.**
- **Wear proper hand and eye protection when searching for leaks. Use wood or cardboard instead of hands.**
- **Keep all components in good repair.**

Wheel Bearings

Implement Hub

- Position implement in field position.
- Shut tractor off, remove key, and engage park brake.
- Block wheel on tractor.
- Raise the implement wheel enough to clear the surface.
- Securely block implement frame.
- Remove wheel from hub.
- Remove the dust cap, cotter pin, and the slotted nut and washer.
- Be careful when pulling the hub off as not to drop the outer bearing.
- Clean spindle and bearing components with solvent.
- Inspect for wear on bearings, spindle and cups, replace parts as required.
- Do not reuse old seals. Use only new seals when assembling.
- Pack inner hub with bearing grease.
- Be sure bearing and cup are dry and clean.
- Work grease into the bearing rollers, until each part of the bearing is completely full of grease.
- Install inner bearing and cup first, then press new seals in place.
- Place hub on spindle.
- Install outer bearing, washer and slotted nut.
- Tighten nut while turning the wheel until a slight drag is felt.
- Back nut off one slot and install a cotter pin. Bend cotter pin up around nut.
- Pack grease inside the dust cap and tap into position.

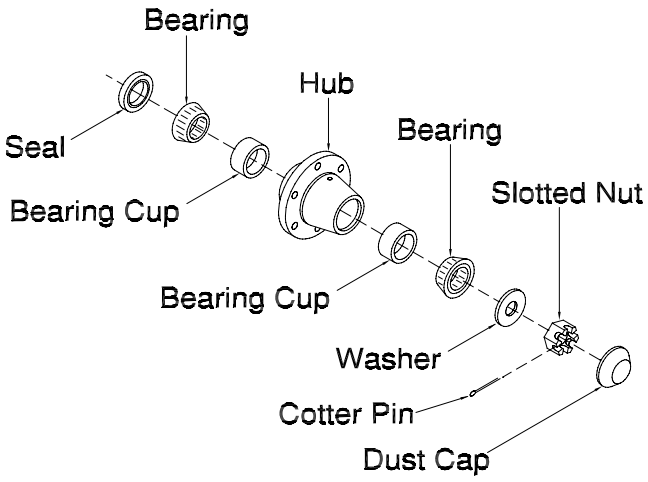

Important

Check wheel bearings for play every 5,000 acres (2,000 hectares) or yearly, which ever occurs first. Tighten as required.

Wheel Bearings - Continued

Contour Opener Hub

- Position implement in field position.
- Move “System” ball valve to service position and **relieve all pressure** from the accumulator circuit using the tractor remote.
- Shut tractor engine off and remove key. Engage park brake before proceeding.
- Place “Openers” ball valve into locked position to prevent accidental oil flow to openers.
- Follow procedure for hub removal and bearing replacement outlined under “Implement Hub”.

Important

Check wheel bearings for play every

5,000 acres (2,000 hectares)

or yearly, which ever occurs first.

Tighten as required.

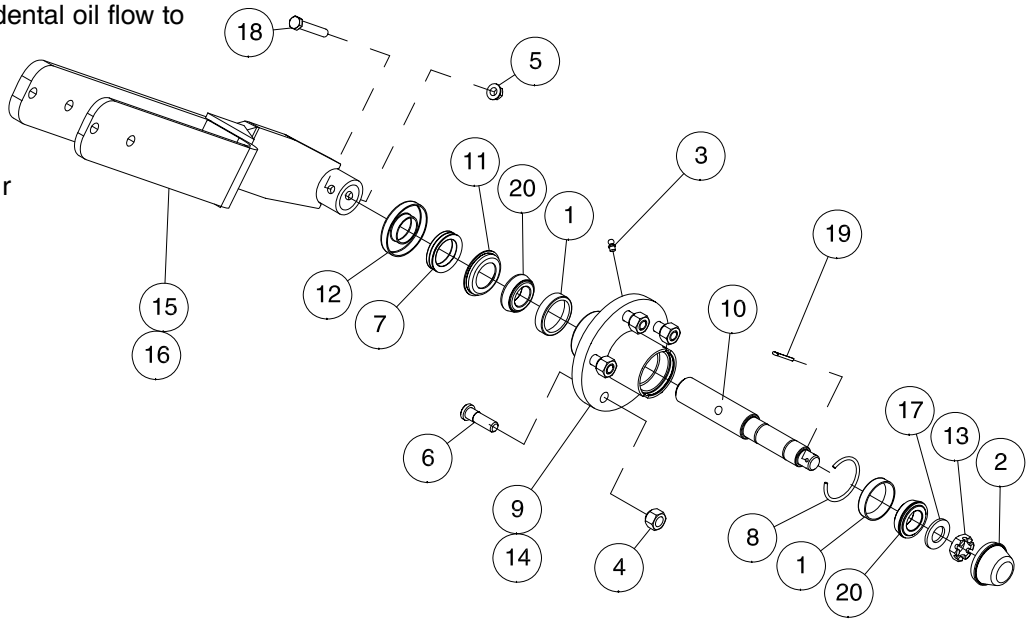

Item	Part No.	Description	Qty
1	N14009	Bearing Cup	2
2	N14011	Dust Cap	1
3	S-752	Grease Zerk - 1/4	1
4	S50246	Tapered Wheel Nut - 1/2-20 UNF	5
5	S27987	Center Lock Flange Lock Nut - 3/8	1
6	S50247	Press-In Wheel Stud - 1/2-20 UNF	5
7	S48842	V-Seal - 1-1/4 Shaft	1
8	S48843	Dust Cap Retaining Wire	1
9	S48844	Hub Casting - 1000 Lb - 5 Bolt	1
10	S48846	Spindle - 1-1/4 Dia	1
11	S48847	Seal Counterface	1
12	S48848	Seal Retainer	1
13	S48849	Slotted Jam Nut - 3/4	1
14	S48850	Packer Hub Assy	1
15	S49299	Packer Arm	1
16	S49500	Packer Arm Sub-Assy	1
17	W-476	Flat Washer - 3/4	1
18	W-479	Hex Bolt - 3/8 x 2 1/4 Lg	1
19	W-529	Cotter Pin - 1/8 x 1 Lg	1
20	W-4187	Bearing Cone	2

Wheel Bearing Adjustment

Meter Drive Hub

See “Contour Opener Hub” for details.

- Check wheel bearings for play every 5,000 acres (2,000 hectares) or yearly, which ever occurs first.
- Tighten as required.

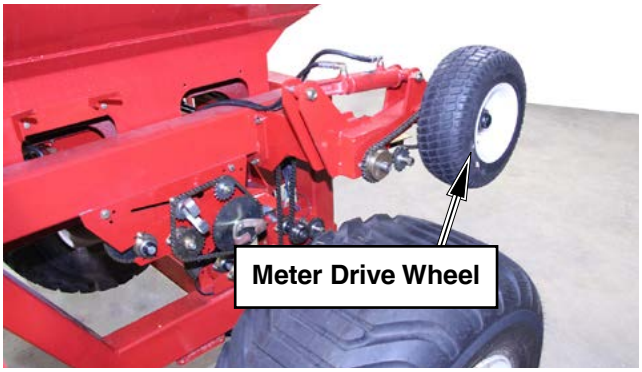

Wheel Bearing Adjustment Procedure (Double Nut Arrangement)

1. Prior to installing any wheel-end fasteners, make sure the spindle area is free of dirt and debris. As well, make sure all nuts and washers are free of dirt. Clean mating surfaces are important for proper wheel-end assembly.
2. After properly installing the bearing cones and wheel-end seal onto the spindle, and the wheel-end is slid onto the spindle, tighten the inner spindle nut with a torque wrench to 150-200 ft. lbs. to set the bearings and wheel-end. **CAUTION: DO NOT USE AN AIR IMPACT WRENCH TO TIGHTEN THIS NUT!**
3. Loosen this inner nut to allow the brake drum to rotate freely. Backing off one (1) full turn is recommended.
4. Re-tighten the inner spindle nut to 50 ft. lbs. by hand using a torque wrench to position the bearings for final adjustment. **CAUTION: DO NOT USE AN AIR IMPACT WRENCH TO TIGHTEN THIS NUT!**
5. Back the inner spindle nut off 1/4 turn.
6. Install the retaining fastener or fasteners onto the spindle according to the fastener used. If washers are used, be sure they are facing in the right direction and are clean. Make sure any washers with dowels fit properly into the mating holes.
7. Install the outer spindle nut. Using a torque wrench, tighten this nut to 250-300 ft. lbs. Resulting end play should be .001” - .005”.

Note: If end play is not .001” - .005”, disassemble and repeat this procedure.

Air Brake Maintenance

Every Three Months or 25,000 Miles

1. Check the condition of the foundation brakes, including drums, shoes and linings, cams, rollers, bushings, etc.
2. Check for structural damage of the housing, worn clevis, worn clevis bushings and condition of the boot for cuts or tears. Replace if necessary.
3. After allowing the brake drum to cool to room temperature, check for correct chamber stroke following the procedure on page 6-10. Due to different operating conditions, chamber stroke tests may be necessary at earlier intervals. See charts on page 6-10 for the recommended stroke measurements.

Note: An automatic slack adjuster should not have to be manually adjusted except for initial installation and at the time of brake reline.

Every Six Months or 50,000 Miles

Gunite slack adjusters are factory lubricated and extensively sealed to protect against dirt, water, salt and other corrosive elements. Nevertheless, periodic lubrication is recommended.

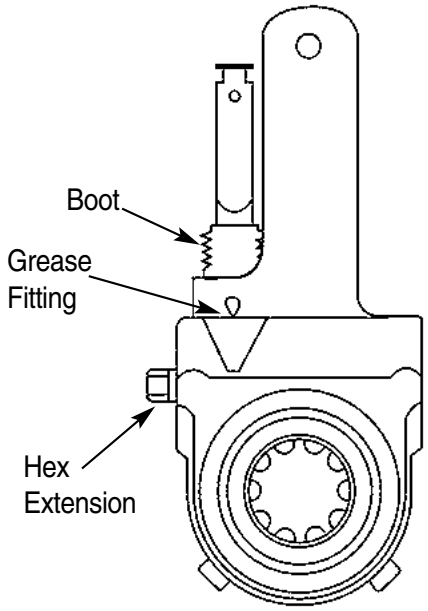

Figure 1 - Lubrication Points

Greasing the Slack Adjuster

1. A grease fitting is provided to allow lubrication during normal chassis servicing (see fig. 1). With a conventional grease gun, lubricate until grease appears on the camshaft, or grease flows from the grease relief.

Note: Slack Adjusters with a grooved and drilled worm wheel will not have a grease relief on the end cap opposite the adjusting hex.

2. The newest Gunite slack adjusters are produced without a grease relief, forcing lubricant through the drilled worm wheel onto the camshaft. Previous designs incorporated a grease relief (see fig. 2).
3. Lubriplate Aero is the grease used in the manufacture of Gunite slack adjusters. It is recommended for use in temperatures as low as -40 degrees F (-40 degrees C).

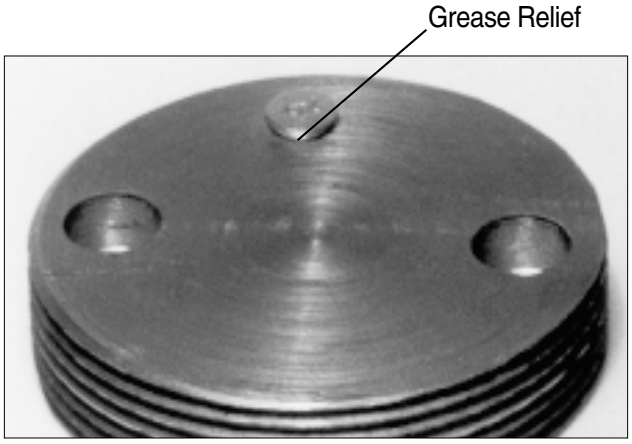

Figure 2 - Grease Relief

Air Brake Maintenance - Continued

Adjust the brakes as follows:

1. Rotate the hex extension clockwise until the brake linings contact the brake drum. Back off the slack adjuster by rotating the hex counterclockwise 1/2 turn.
2. Backing off the slack will require approximately 25 to 30 ft lbs of torque. When backing off the slack adjuster, a ratcheting sound will be heard.
3. Using a ruler, measure the distance from the face of the air chamber to the center of the large pin in the clevis (A) (see fig. 3). Make an 85 psi brake application and allow the chamber push rod to travel its maximum stroke. Measure to the center of the large pin (B). The difference between (A) and (B) is the push rod stroke. Check the following chart for proper maximum stroke after adjustment of the brakes.

Measuring the Free Stroke

4. Free stroke is the amount of movement of the slack adjuster required to move the brake shoes against the drum. With brakes released, measure from the face of the chamber to the center of the clevis pin. Use a ruler to measure the movement of the slack adjuster until the brake shoes contact the drum (fig. 4). The difference between the released and applied measurements is the free stroke. The free stroke should be 3/8" to 5/8". If the free stroke is good, but the applied stroke is too long, there is a problem with the foundation brake. Check the foundation brake for missing or worn components, cracked brake drums, or improper lining to drum contact. If the free stroke is greater than the recommended distance (3/8" to 5/8"), a function test of the slack adjuster should be performed (see page 6-11). If the free stroke is less than 3/8", a dragging brake can occur. Check to see that the manual adjustment procedure was followed correctly. Manually readjust the brake following the procedure on this page.

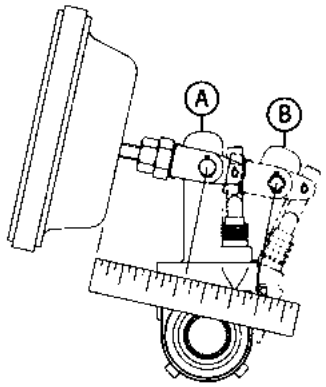

Figure 3 - Measuring Maximum Stroke

"STANDARD" CLAMP TYPE BRAKE CHAMBER DATA

Type	Outside Diameter	Rated Stroke	Maximum stroke at which brakes must be readjusted
9	5-1/4	1.75	1-3/8
12	5-11/16	1.75	1-3/8
16	6-3/8	2.25	1-3/4
20	6-25/32	2.25	1-3/4
24	7-7/32	2.25	1-3/4
30	8-3/32	2.50	2
36*	9	3.00	2-1/4

**Note: If type 36 chamber is used, slack length should be less than 6".*

"LONG STROKE" CLAMP TYPE BRAKE CHAMBER DATA

Type	Outside Diameter	Rated Stroke	Maximum stroke at which brakes must be readjusted
16	6-3/8	2.50	2
20	6-25/32	2.50	2
24	7-7/32	2.50	2
24*	7-7/32	3.00	2-1/2
30*	8-3/32	3.00	2-1/2

**Note: Identified by square air port bosses.*

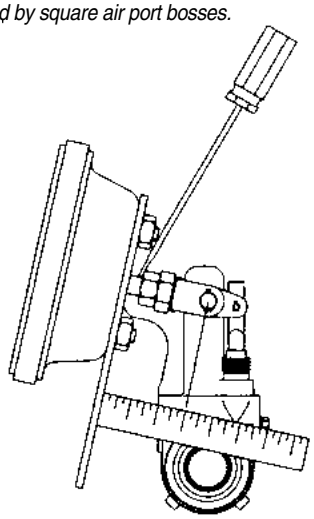

Figure 4 - Free Stroke

Air Brake Maintenance - Continued

Slack Adjuster Function Test

If the maximum stroke, with an 85 psi brake application is less than the distance shown in the chart on page 6-10, the Gunite slack adjuster is functioning properly.

Troubleshooting

1. **The Gunite slack adjuster should not require manual readjustment.** If the maximum chamber stroke is within the range for the size chamber used (see fig. 3), the slack adjuster should not be manually readjusted. If the chamber stroke exceeds the limit, measure the free stroke. If the free stroke is good, but the applied stroke is too long, there is a problem with the foundation brake. Check the foundation brake for missing or worn components, cracked brake drums, or improper lining to drum contact.

   If the free stroke is **greater** than the recommended distance (3/8" to 5/8"), a function test of the slack adjuster should be performed. To test the function of the slack adjuster, place a 7/16" box wrench on the hex extension and rotate it 3/4 of a turn counterclockwise. A ratcheting sound will be heard. Mark the 7/16" hex extension with chalk and apply the brakes several times and watch for the hex to rotate clockwise.

   The hex extension must rotate clockwise. The adjustment is intentionally made in small increments so it will take several cycles to bring the adjuster within the stroke limit shown in the chart.

   If the free stroke is **less** than 3/8", a dragging brake can occur. Check to see that the manual adjustment procedure was followed correctly. Manually readjust the brake following the procedure on page 6-10.

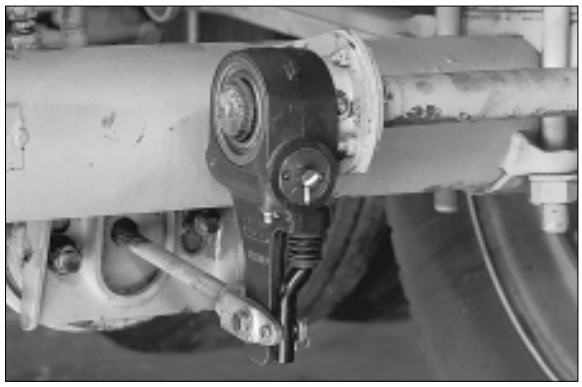

2. Check the torque by attaching a torque wrench to the hex extension and turning it in a counterclockwise direction and record the measurement.
3. If the hex extension did not rotate clockwise during brake application or there is less than 15 ft lbs of torque required to rotate the hex extension in the counterclockwise direction, the slack adjuster must be replaced. If immediate replacement is not possible, proper brake adjustment must be maintained by manual adjustment.
4. If the hex extension rotates clockwise and has a torque of greater than 15 ft lbs when rotated counterclockwise, the slack is functioning properly. Check the foundation brake for proper function, worn cam bushing, pins and rollers, broken springs, worn quick connect clevis, worn clevis bushings and clevis pins. Repair as necessary and repeat the function test.
5. Readjust the brake after the function test.

Air Brake Maintenance - Continued

FF2 Full Function Valve Fitting General Installation Guidelines

1. Dependent on sealant type, the basic guidelines for FF2 pipe fitting installation is finger tight, plus one or two turns **maximum**. Sealant is the variable with the greatest effect on fitting installation. Characteristics of different sealants are as follows:

   Teflon Pipe Sealant

   Teflon pipe sealant acts as a lubricant. Fittings go in farther with the same torque. They may not have to go a full turn past finger tight to seal.

   Fittings Without Sealant

   Fittings without sealant will seal adequately in plastic ports. They arrive at finger tight in less turns than lubricated fittings. Unlike lubricated fittings, fittings without sealant require more turns past finger tight to achieve a seal, typically one or two turns.

   Fittings With Dry Sealant

   Fittings with dry sealant become finger tight in less turns than fittings without sealant. The dry sealant increases the fitting size so it starts tightening sooner. As the fitting is wrench tightened the sealant compresses, Having variable effects on turns required to seal. Sealing still requires one to two turns past finger tight, but more attentions must be paid to fitting torque.

2. Start fittings straight to prevent crossed threads. Fittings should be started by hand for at least one turn before use of wrenches.
3. Dry sealant must be applied properly. If dry sealant is applied to the first thread of a fitting, it will be hard to start the fitting straight.
4. Any pipe fitting or sealant can be used in the installation of the FF2 Full Function Valve. The consistent use of one type of sealant will help you install fittings successfully.
5. The use of teflon tape on a regular basis is not recommended. Bits of tape break off during installation.
6. When the last thread or hex of a fitting is flush with the surface, the fitting has been installed past the point required to seal. **Do not install the fitting farther!**

Max Torque (in-lbs)

1/4”NPTF - 120

3/8”NPTF - 180

Notes

Section 8: Storage

Section Contents

Preparing for Storage....8-2
Metering Body Storage....8-3
Wing Lift Cylinder Shaft Protection....8-4
Removing From Storage....8-5
- Monitor....8-5
- Auger/Conveyor....8-5

Preparing for Storage

- To insure longer life and satisfactory operation, store the implement in a shed.
- If building storage is impossible, store away from areas of main activity on firm, dry ground.
- Clean machine thoroughly.
- Inspect all parts for wear or damage.
- Avoid delays - if parts are required, order at the end of the season.
- Lubricate grease fittings. (Refer to Maintenance Section).
- Tighten all bolts to proper specifications (Refer to Maintenance Section).
- To prevent corrosion and damage by rodents, clean the hopper boxes and metering systems thoroughly and wash with mild soapy water solution. Rinse with water and dry thoroughly (Refer to Metering Body Storage).
- A light coating of silicone lubricant or WD-40 or penetrating oil should be applied to all metal metering system components before storage.
- Avoid lubricant contact with grain and fertilizer hoses and tubes.
- Relieve tension on tank lids.
- Loosen clean-out doors.
- Remove all chains and store in clean oil.
- For a safer storage, lower the implement into field position and release the hydraulic pressure.
- If implement must be stored in a raised position, ensure that wings are properly secured with lock pins.
- Level implement using hitch jack and block up.
- Relieve pressure from hydraulic system.
- Cover tires with canvas to protect them from the elements when stored outside.
- Coat exposed wing lift cylinder shafts **(Refer to Wing Lift Cylinder Shaft Protection).**
- Paint any surfaces that have become worn.

⚠ Warning

Do not allow children to play on or around the machine.

MORRIS PAINT

Spray Cans:

Part Number	Description
W-4647	Red MORRIS Spray Can
N31087	White MORRIS Spray Can

Litre Cans:

Part Number	Description
Z-10	Red MORRIS Paint/Litre

Preparing for Storage - Continued

Metering Body Storage

It is extremely important that the metering system is thoroughly cleaned before storing for any length of time.

The following procedure should be followed for both tanks:

- Empty tanks (Refer to Unloading Tanks).
- Remove all seed plates.
- Remove the collector bottom.
- Remove blank off covers and the run caps on the collectors. Clean debris from chamber area.
- Run fan.
- Wash the interior of both tanks and metering system with soapy water. Wash the collector.
- Rinse with cold water and let the unit air dry.
- Coat metal parts with silicone lubricant or WD-40.

Note: Diesel fuel will harm seals.

- Reinstall blank off covers and the run caps on the collectors.
- Reinstall seed plates.
- Replace the inspection door and the bottom of the collector.
- Start the fan and operate for 5 minutes to dry out any remaining moisture in the system.
- Leave inspection doors loose to help prevent condensation building up inside the tank.
- Leave lid latches loose to help maintain resilience of the seals.

Important

At no time should corrosive fertilizer or similar materials be allowed to remain in the tank or metering body cavity.

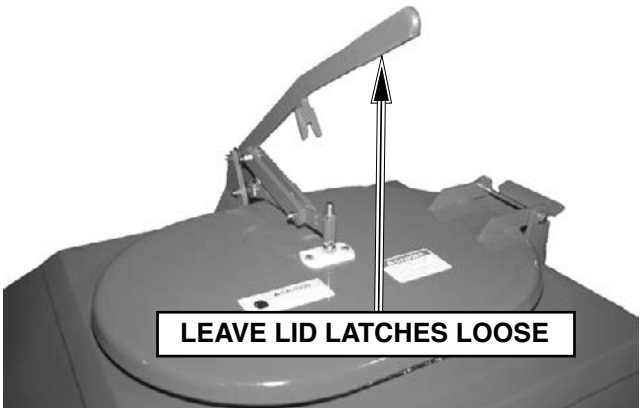

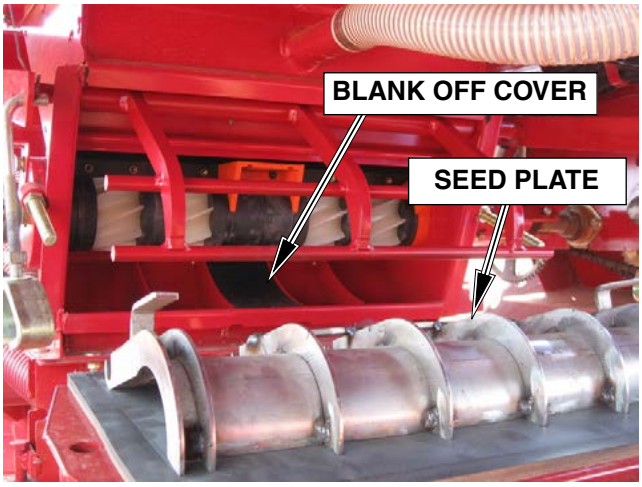

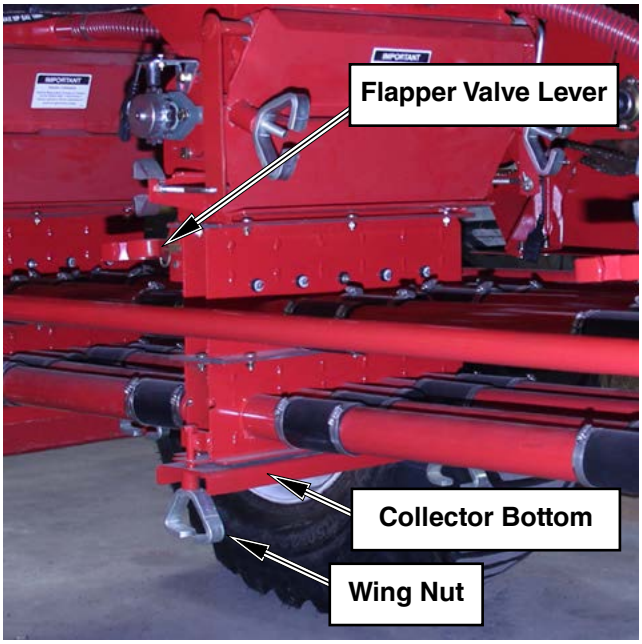

Double Shoot Shown

Wing Lift Cylinder Shaft Protection

The steps summarized below should be followed when protecting chrome plated shafting on equipment:

- Position the equipment as it will be stored, and identify all the exposed portions of the chrome plated shafts.
- Clean dirt and dust from the exposed portions of the shafting using a dry cloth or a cloth which has been dampened with an appropriate solvent.
- Prepare a mixture of 60% oil-based rust inhibitor and 40% Kerosene. Apply a thin coating of this mixture to the exposed surfaces of the chrome plated shafting. No. 1 fuel oil may be substituted for Kerosene. A cloth dipped in the mixture can be used to apply the coating.
- Inspect the shaft surfaces after six months and apply additional corrosion preventative mixture.
- If the equipment is to be moved and then stored again for an extended period of time, the steps above should be repeated for all shafts that were stroked during the move.
- **Before retracting the cylinders the protective coating should be removed,** to prevent fine sand and dirt that has accumulated in the coating, from damaging the shaft seal. **Under no circumstances should sandpaper or other abrasive be used to clean the surfaces.** Plastic or copper wool in combination with an appropriate solvent will remove most of the dirt.

⚠ Caution

Dirt in the hydraulic system could damage O-rings, causing leakage, pressure loss and total system failure.

Removing From Storage

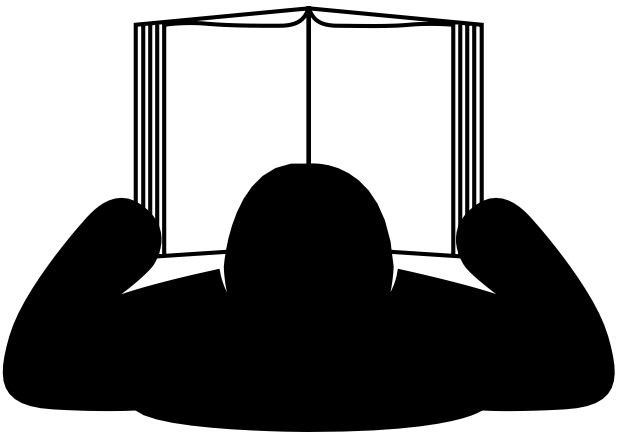

- Review Operator's Manual.
- Check tire pressure (Refer to Tire Pressure List)
- Tighten lid latches.
- Lubricate and install chains.
- Spray internal parts of the metering body with silicone lubricant or WD-40 or penetrating oil to loosen any corrosion buildup.
- Clean machine thoroughly. Remove coating from exposed cylinder shafts **(Refer to Wing Lift Cylinder Shaft Protection).**

  Check for air leaks (Refer to Maintenance Section).
- Lubricate grease fittings. (Refer to Lubricating Section).
- Tighten all bolts to proper specifications (Refer to Bolt Torque Chart).

Monitor

Familiarize yourself with all monitor functions. Ensure all monitor *"settings"* are correctly set for the air cart/ seeding tool combination. Recognize and correct alarm conditions as indicated on the machine. See Monitor Section for more details.

Check all wire harness connections for corrosion and use a dielectric spray to clean. Inspect all sensors for proper gap. See Monitor Section for more details.

Auger/Conveyor

Inspect all augers/conveyors used in handling the products for seeding. Run augers to clean out any debris inside auger so it does not get transferred to the tank.

Notes

Section 9: Troubleshooting

Section Contents

Air Delivery 9-3
- Delivery hoses plugged 9-3
- Hydraulic fan will not turn 9-3
- Fan turning too slow 9-3
- Material flowing thru system when unit is stationary and the fan running 9-3
- Material not being divided in distribution head 9-3
- Material not being metered out 9-4
- Material not being accurately metered out of the metering body 9-5
- Plugged seed boots 9-6

Monitor 9-7
- Monitor lights up but does not seem to work 9-7
- No fan display 9-7
- No ground speed display 9-7
- No meter speed display 9-7
- No display, no back light 9-7
- Bin indicates always empty 9-8
- Bin indicates always full 9-8

Seed Unit 9-9
- Machine not operating straight. 9-9
- Lack of penetration. 9-9
- Openers wearing unevenly 9-9
- Wing lifting too slowly. 9-9
- Wings not lowering. 9-9
- One wing will lift, other will not. 9-9
- Oil accumulation. 9-9
- Accumulator system pressure drop excessive. 9-10
- Openers won't lift or lower. 9-10
- Openers can not be fully pressurized. 9-10
- Shanks hang back and trip out during normal operation. 9-10

Section Contents - Continued

Seed rows covered in loose soil after seeding.....9-10
Packer wheels bounce and chatter excessively in field. 9-10
Openers drop quickly after transport lock valve is closed. 9-10
Opener pressure drops quickly during normal operation.....9-11
Excessive seed depth and soil throw.....9-11
Openers not fully lifting to transport position.....9-11

Problem	Cause	Correction
Air Delivery		
Delivery hoses plugged	Insufficient air flow.	Clean fan impeller blades. Clean fan intake screen. Increase fan rpm.
	Hose sag.	Shorten hoses or add additional supports.
	Seed boots plugged with dirt.	Clean seed boots. See *"Seed Boot Plugging"* below.
	Hose obstruction.	Remove obstruction from hose.
	Air delivery hose partly off manifold.	Reinstall hose properly on manifold.
	Kinked hoses.	Straighten hoses and properly secure them to framework.
	Obstruction in divider head.	Remove access door and clear obstruction from appropriate outlets - be sure to use appropriate screens when filling.
	Exceeding machine's delivery capabilities.	Reduce ground speed and speed up fan.
	Poorly mounted hoses.	Reroute hoses.
Hydraulic fan will not turn	Selector valve in wrong position.	Switch the selector to fan position.
	Hydraulic hoses not connected properly to tractor.	Reverse hydraulic hoses.
	Insufficient oil flow.	Perform flow test.
	Flow to hydraulic motor.	
Fan turning too slow		Increase flow control setting.
	Low hydraulic pressure.	Check hydraulic pressure minimum 2100 psi.
	Damaged metering wheel.	
Material flowing thru system when unit is stationary and the fan running		Replace metering wheel.
	Incorrect Seed Plate installed.	Adjust as required. See *"Seed Plate Settings".*
Material not being divided in distribution head	Head partially blocked.	Remove blockage and reinstall hose.
	Kinked hose running to shank.	Straighten or replace hose.

Problem	Cause	Correction
Air Delivery - Continued		
Material not being divided in distribution head	Head partially blocked.	Remove blockage and reinstall hose.
	Kinked hose running to shank.	Straighten or replace hose.
	Damaged distribution section on head.	Replace head with new one.
	Bent or damaged diffuser pipe.	Straighten or replace diffuser pipe.
	Secondary hose length.	See “Secondary Hose” in Operation Section.
	Tanks not pressurized.	Inspect lid seals. Clean pressurization hoses.
	Main drive chain not installed.	Install drive chain properly on Drive Sprocket.
Material not being metered out	Drive chain or chains broken.	Install new chain. Ensure connecting link is installed correctly. Curved part of spring clip should face the direction of chain travel.
	Massive air leak in tank, resulting in material being blown up out of the metering cup.	Repair the air leak. See “Air Leaks” in Maintenance Section. See “Tank Lid Adjustment” in Maintenance Section.
	Material caked up in tank.	Remove material and completely clean out the tank.
	Excessively wet material in tank.	Remove wet material and use reasonably dry material.
	Coupler bolt sheared.	Replace with Grade 8 bolt.

Problem	Cause	Correction
Air Delivery - Continued		
Material not being accurately metered out of the metering body	Air delivery hoses loose, cracked or pulled off.	Tighten the hoses, replace cracked hoses or install hoses pulled off their respective locations.
	Inlet screen to fan blocked off.	Clean off material that is blocking the fan screen.
	Incorrect Seed Plate installed.	Install correct Seed Plate Adjust Seed Plate lock - See Maintenance Section.
	Seed Plate lock not adjusted correctly.	Clean out caked up material.
	Material caked up above one or more of the metering cups.	Use reasonably dry, fresh material only.
	Excessively damp material in tank.	Remove obstruction, and always fill tanks through the screen.
	Foreign obstruction in tank above metering wheels.	Clean out the metering cups and wheels.
	Caked up metering wheels on some or all of the metering cups.	Replace broken metering wheels.
	Damaged metering wheels. Metering wheels mismatched to secondary outlet.	Install correct wheels to head. 1 3/4” wide wheel for 7 outlet head. 2” wide wheel for 8 outlet head. 2 1/4” wide wheel for 9 outlet head. 2 1/2” wide wheel for 10 outlet head. Be sure appropriate spacers are also used. See Operation Section.
	Collector Valves set incorrectly on Double Shoot machines.	Adjust lids and doors as necessary.
	Air Leak in System.	Replace damaged seals. See Maintenance Section.
	Meterbody pressurization hose disconnected.	Reconnect hose to meterbody/plenum.

Problem	Cause	Correction
Air Delivery - Continued		
Plugged seed boots	Backing up with openers near or in the ground.	Lift machine all the way up before backing up.
	Turning very sharp with openers near or in the ground.	Lift machine all the way up when making sharp turns.
	Lowering machine without any forward motion.	Always have forward motion when lowering machine.
	Worn openers or sweeps.	Replace openers.
	Severely bent or damaged boots.	Straighten or replace as required.
	Excessively wet conditions.	Change openers, operate when drier.
	Opener Adjustment.	See *"Opener Adjustment"* in Operation Section.

Problem	Cause	Correction
Monitor		
Monitor lights up but does not seem to work	Faulty monitor	Replace monitor.
	Completely disconnected harness.	Connect harness.
No fan display	Incorrect gap between sensor and target.	Gap should be 0.030” (0.76 mm).
	Faulty sensor.	Replace sensor.
	Broken or shorted wire.	Replace or repair harness.
No ground speed display	Sensor to magnet gap too large.	Gap should be 0.030” (0.76 mm).
	Faulty sensor.	Replace sensor.
	Broken or shorted wire.	Replace or repair harness.
No meter speed display	Sensor to magnet gap too large.	Gap should be 0.030” (0.76 mm).
	Faulty sensor.	Replace sensor.
	Broken or shorted wire.	Replace or repair harness.
No display, no back light	Switched off	Switch unit on.
	Poor power connections at the battery.	Ensure good connections.
	Battery below 8 volts.	Check battery voltage.
	Temperature below -10C or above +40C.	Operate between -10C and +40C.

Problem	Cause	Correction
Bin indicates always empty	Broken wire.	Repair wire.
	Faulty sensor.	Replace sensor.
	Wires not hooked to sensor.	Hook up correctly.
Bin indicates always full	Blocked light beam on photoelectric sensor.	Remove object blocking the beam.
	Wire shorted to ground	Repair or replace wire.
	Faulty sensor.	Replace Sensor.

Problem	Cause	Correction
Seed Unit		
Machine not operating straight.	Uneven opener depth.	Refer to Operation Section on depth adjustment.
		Check tire pressure.
Lack of penetration.	Openers worn.	Replacement necessary.
	System pressure too low.	Refer to Operation Section on setting maximum system pressure.
Openers wearing unevenly	Tire tracks. Front row always wears more than the others.	Replace worn openers.
Wing lifting too slowly.	Tractor hydraulic pressure.	Repair pump. Pressure relief valve needs resetting.
	Hydraulic breakaways.	Foreign material or sticking. Check compatibility.
	Hose restriction.	Cylinder linkage binding.
Wings not lowering.	Transport valve in locked position.	Place opener valve into unlocked position.
One wing will lift, other will not.	Assembly.	Hoses reversed at cylinder.
	Restriction in line.	Clean.
	Internal cylinder leak.	Repair cylinder.
Oil accumulation.	Damaged seal.	Replace seals.
	Loose fittings.	Tighten hose and pipe connections.
	Scored cylinder shaft will damage shaft seal.	Replace.
	Normal.	Slight seepage from seal is normal.

Problem	Cause	Correction
Seed Unit - Continued		
Accumulator system pressure drop excessive.	Valve in Bleed-Off position.	Place valve into operating position.
	Leaking opener cylinder.	Repair or replace cylinder.
Openers won't lift or lower.	Openers valve in locked position.	Place openers valve in unlocked position.
	Hydraulic line, fitting or cylinder leak.	Locate leaking line, fitting or cylinder and repair or replace.
	Low oil level.	Fill tractor reservoir.
	Hydraulics clogged.	Replace filter.
	Pivot bolts too tight.	Refer to Maintenance Section on Opener Body Assembly for adjusting procedure.
Openers can not be fully pressurized.	Hydraulic line, fitting or cylinder leak.	Locate leaking line, fitting or cylinder and repair or replace .
	Pressure reducing valve dirty or stuck.	Put openers in float and adjust the reducing valve fully in and out to loosen stuck spool.
Shanks hang back and trip out during normal operation.	System pressure too low for seed depth and soil conditions.	Adjust reducing valve to higher pressure until shanks no longer hang back.
	Air in hydraulic lines.	Bleed hydraulic system.
Seed rows covered in loose soil after seeding.	Ground speed too fast.	Reduce speed and check field finish.
	Back of drill frame is lifting.	Add factory weight kit to rear depth beams.
Packer wheels bounce and chatter excessively in field.	Packing pressure too low.	Adjust reducing valve to higher pressure until packer arms have desired pressure.
	Depth setting too deep.	Reduce opener seeding depth.
Openers drop quickly after transport lock valve is closed.	Hydraulic line, fitting or cylinder leak.	Locate leaking line, fitting or cylinder and repair or replace.

Problem	Cause	Correction
Seed Unit - Continued		
Opener pressure drops quickly during normal operation. (more than 150psi after charging system).	Hydraulic line, fitting or cylinder leak.	Locate leaking line, fitting or cylinder and repair or replace.
	Damaged or stuck pilot operated check valve.	Replace valve.
Excessive seed depth and soil throw.	Soft field conditions.	Reduce pressure and seed depth settings.
	Ground speed too fast.	Reduce speed and re-check depth.
	Hydraulic pressure too high.	Reduce pressure and re-check depth.
Openers not fully lifting to transport position.	Air in hydraulic lines.	Bleed hydraulic system.
	Parallel link pivot bolts too tight.	Loosen pivot bolts in small increments until all openers will drop quickly from raised position under their own weight (put tractor remote in float to allow openers to drop).

Problem	Cause	Correction

www.morris-industries.com

Corporate Head Office
and Training Centre:

2131 Airport Drive
Saskatoon, Saskatchewan
S7L 7E1 Canada
Phone: 306-933-8585
Fax: 306-933-8626

It is the policy of Morris Industries Ltd. to improve its products whenever it is possible to do so. Morris Industries reserves the right to make changes or add improvements at any time without incurring any obligation to make such changes on machines sold previously.

Printed in Canada

June 2017