Hose Assembly

Single Shoot

The difference in length between the longest primary hose and the shortest primary hose should not exceed six feet on single shoot units. The primary hose lengths are specified in the charts below. (See attached pages on hose routing)

Tow Behind									
Roll Length	Cuts Made from Roll								Total used
29 ft at 7 1/2" spacing									
75	12.5	9	9	3	3	3			39.5
50	12.5	12.5	12.5	12.5					50
29 ft at 10" spacing									
50	12.5	12.5	12.5	12.5					50
50	12	12	6	6					36
29 ft at 12" spacing									
50	12.5	12.5	12.5	11					48.5
25	11	5							16
34 ft at 7 1/2" spacing									
75	12.5	12.5	12.5	12.5	12.5	12.5			75
75	11	11	5	5	5	5			42
34 ft at 10" spacing									
75	12.5	12.5	12.5	12.5	12.5	11			73.5
50	11	5	5	5					26
34 ft at 12" spacing									
50	12.5	12.5	12.5	12.5					50
50	11	11	5	5					32
39 ft at 7 1/2" spacing									
100	12.5	12.5	12.5	12.5	12.5	7	7		76.5
75	13	13	8	8	12.5	12.5	7		74
39 ft at 10" & 12" spacing									
75	11	11	12.5	12.5	12.5	5	5	5	74.5
50	12.5	12.5							25

Tow Behind								
Roll Length	Cuts Made from Roll							Total used
49 ft at 7 1/2" spacing								
100	15	15	15	12.5	12.5	12.5	12.5	95
100	18	18	15	12	12	12.5	12.5	100
25	12.5	12.5						25
49 ft at 10" & 12" spacing								
75	21	21	15	15				72
75	15	15	12.5	12.5				55
25	12.5	12.5						25
25	12.5	12.5						25
55 ft at 10" spacing								
100	21	21	12.5	12.5	12.5			79.5
75	15	15	15	15	15			75
25	12.5	12.5						25
25	12.5	12.5						25
55 ft at 12" spacing								
75	21	21	15	15				72
75	15	15	12.5	12.5				55
25	12.5	12.5						25
25	12.5	12.5						25
60 ft at 10" spacing								
100	22	16	16	16	12.5		12.5	95
75	22	16	16	12.5				66.5
25	12.5	12.5						25
25	12.5	12.5						25
60 ft at 12" spacing								
100	22	16	16	16	12.5	12.5		95
75	22	16	16	12.5				66.5
25	12.5	12.5						25
25	12.5	12.5						25

Head Locations

Air Seeder Tow Behind - 29 ft

7 1/2" Spacing

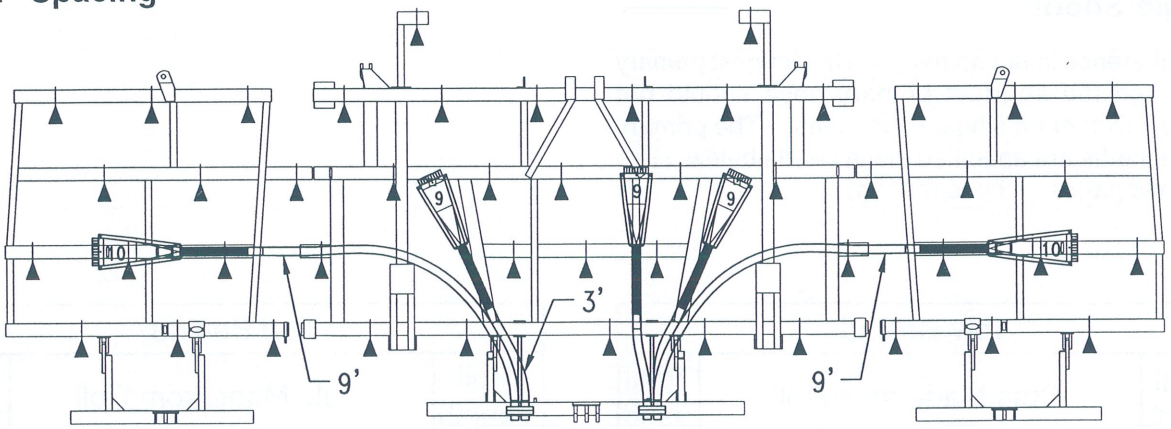

10" Spacing

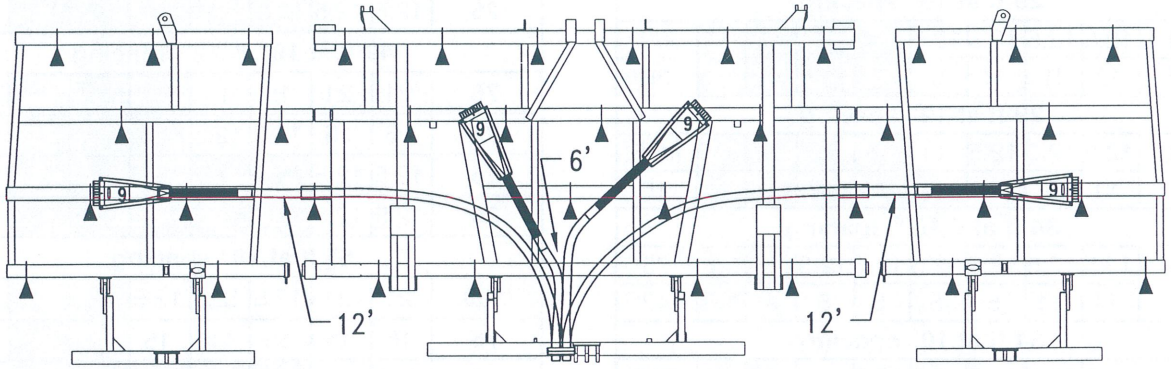

12" Spacing

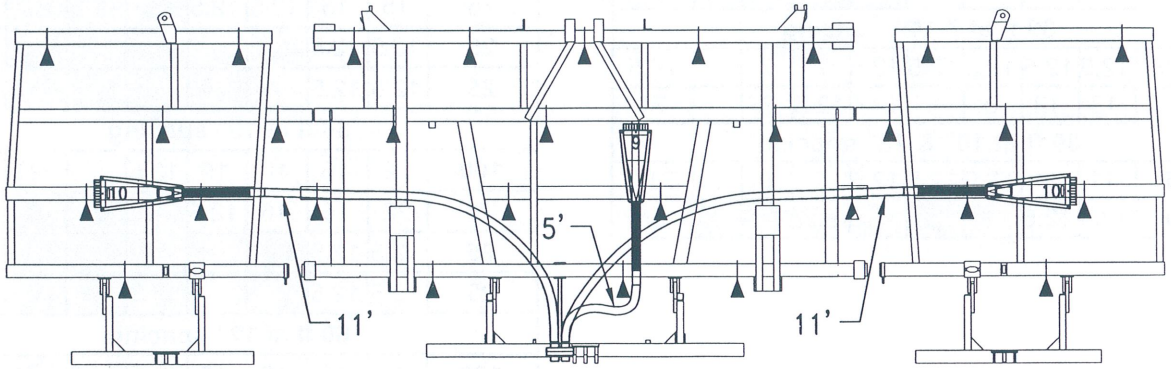

Note: Divider head stands mounted on 29 ft wings must be cut 12" shorter

Air Seeder Tow Behind - 34 ft

7 1/2" Spacing

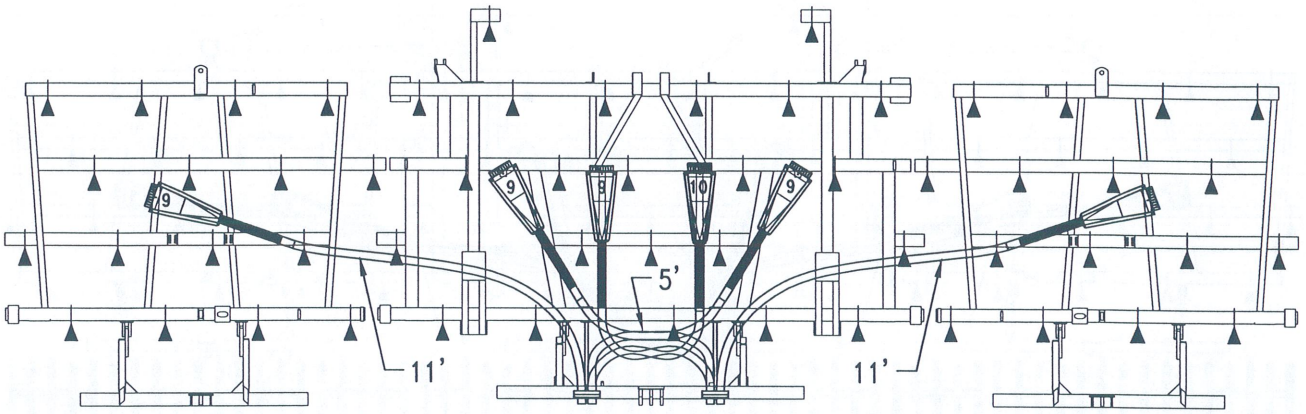

10" Spacing

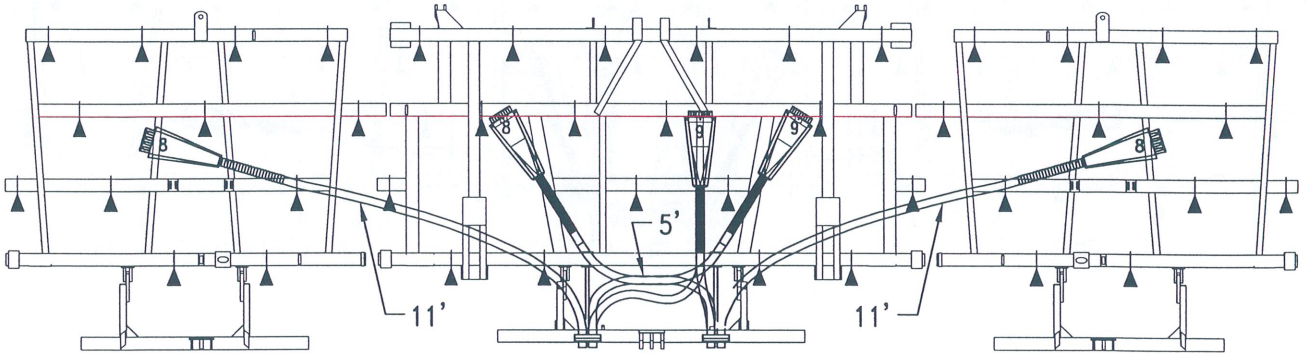

12" Spacing

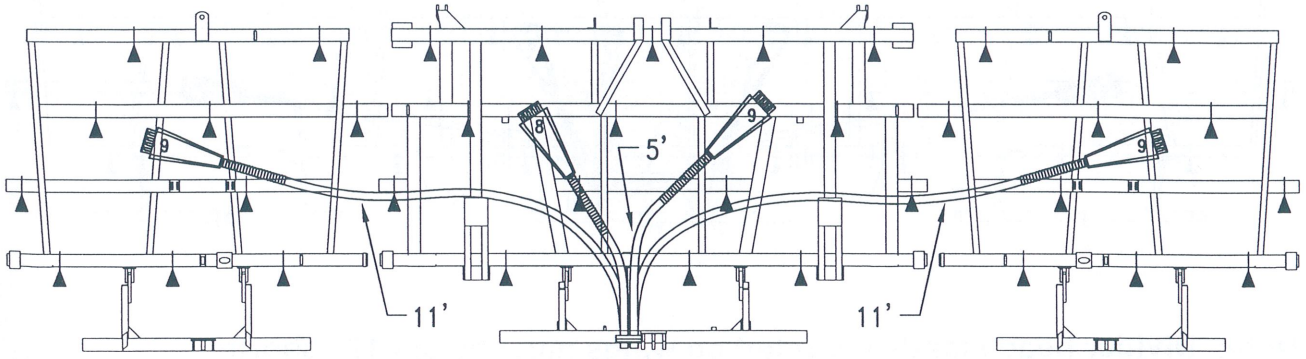

Head Locations

Air Seeder Tow Behind - 39 ft

7 1/2" Spacing

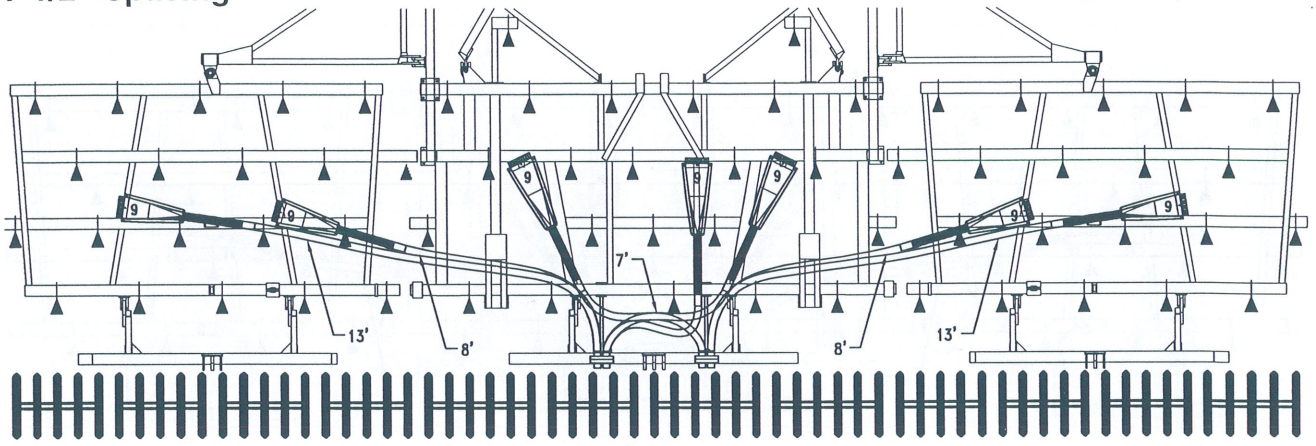

10" Spacing - 40 ft

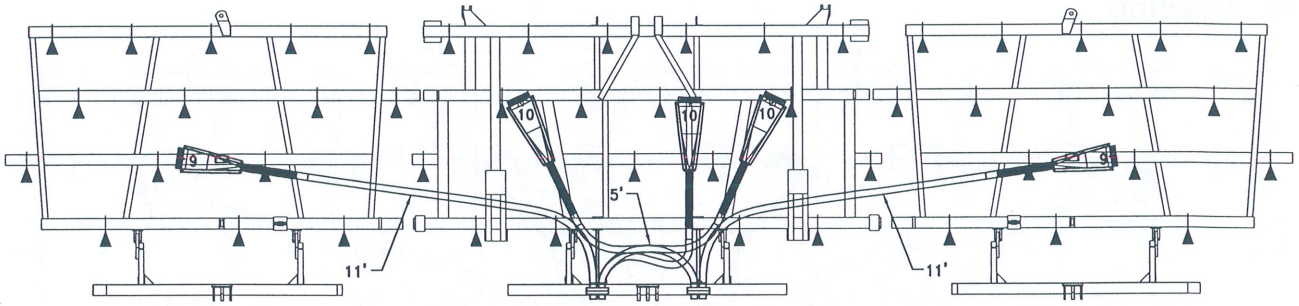

12" Spacing - 41 ft

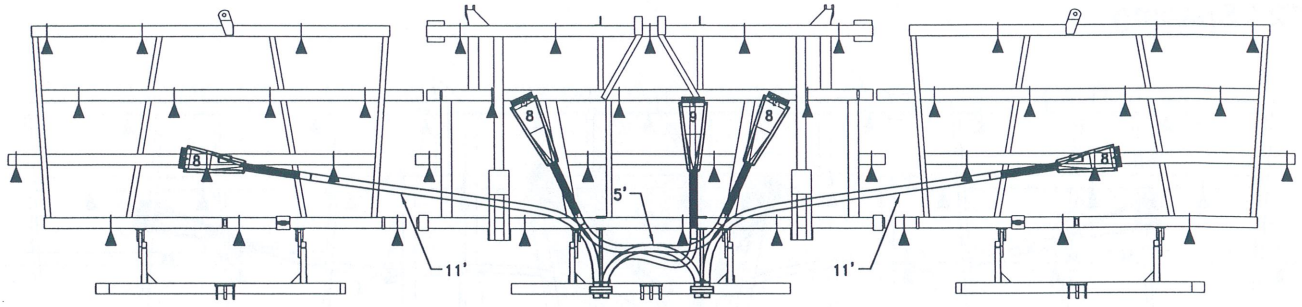

Note: Divider head stands mounted on wings must be cut 12" shorter

Air Seeder Tow Behind - 49 ft

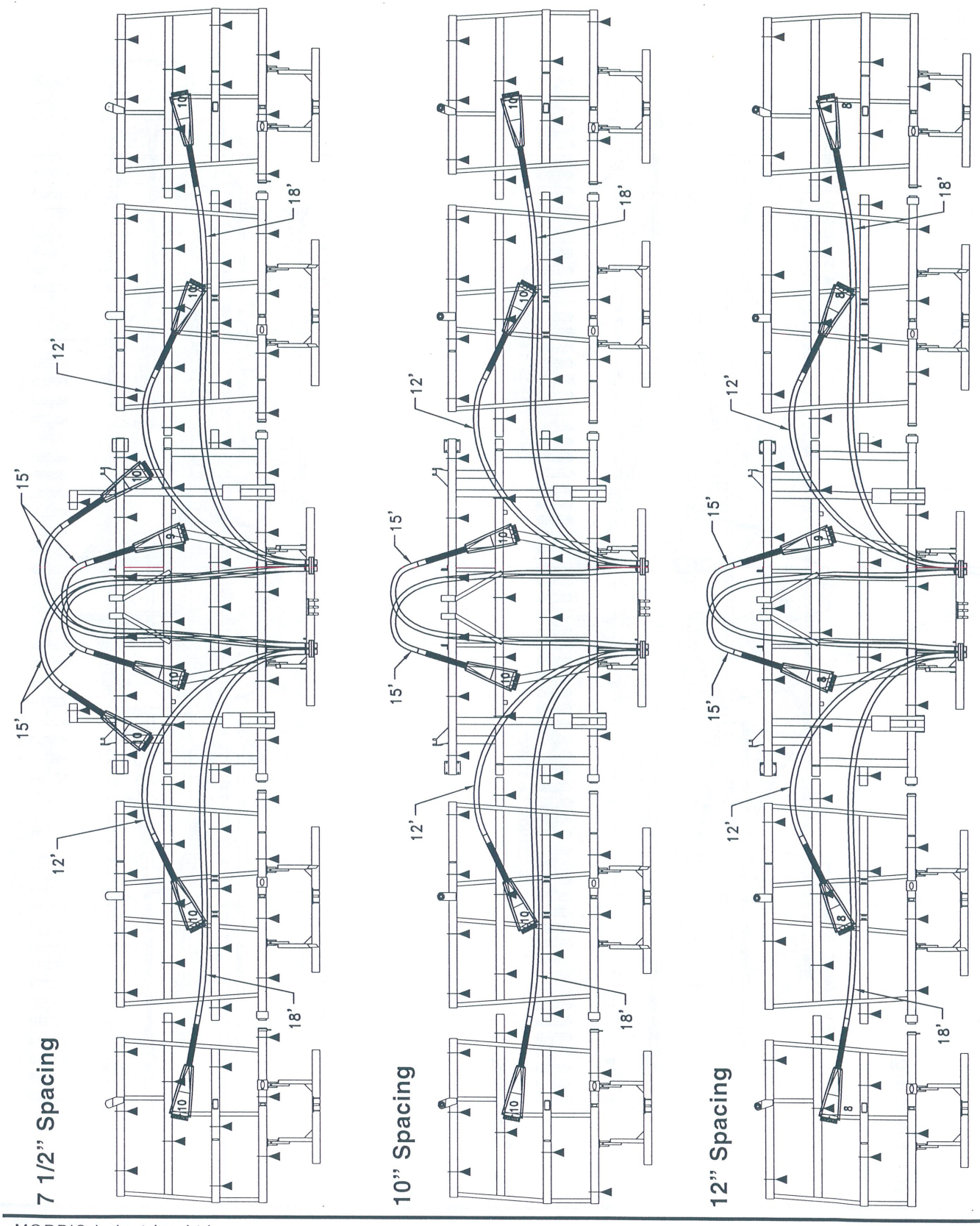

Head Locations

Air Seeder Tow Behind - 55 ft

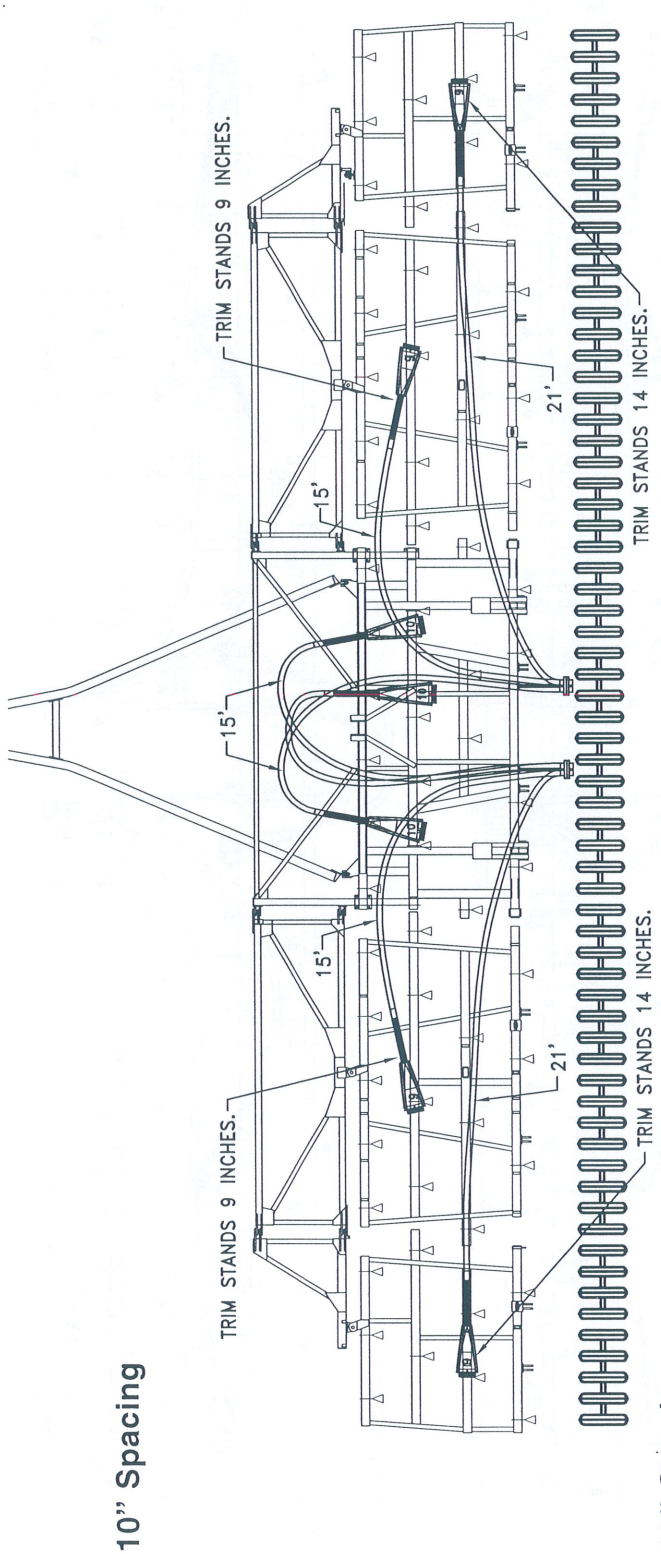

10'' Spacing

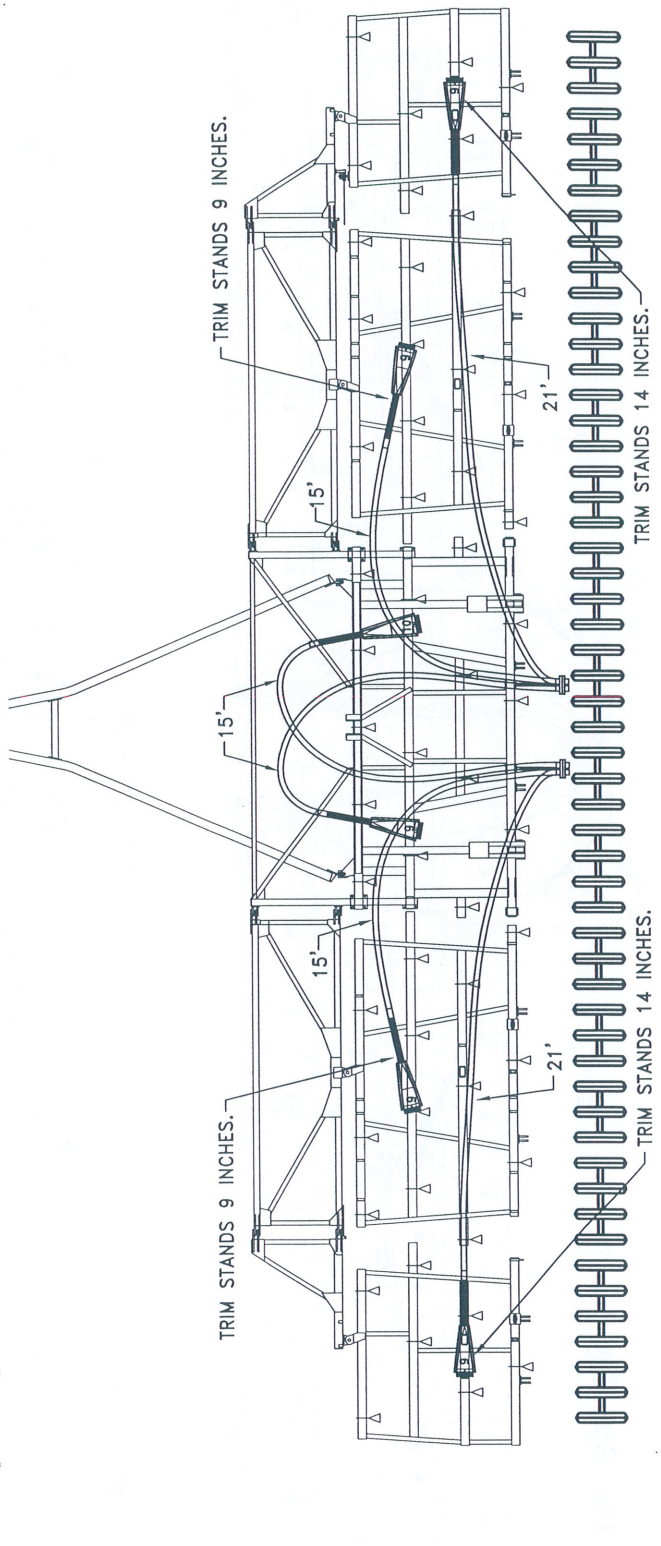

12'' Spacing

Air Seeder Tow Behind - 60 ft

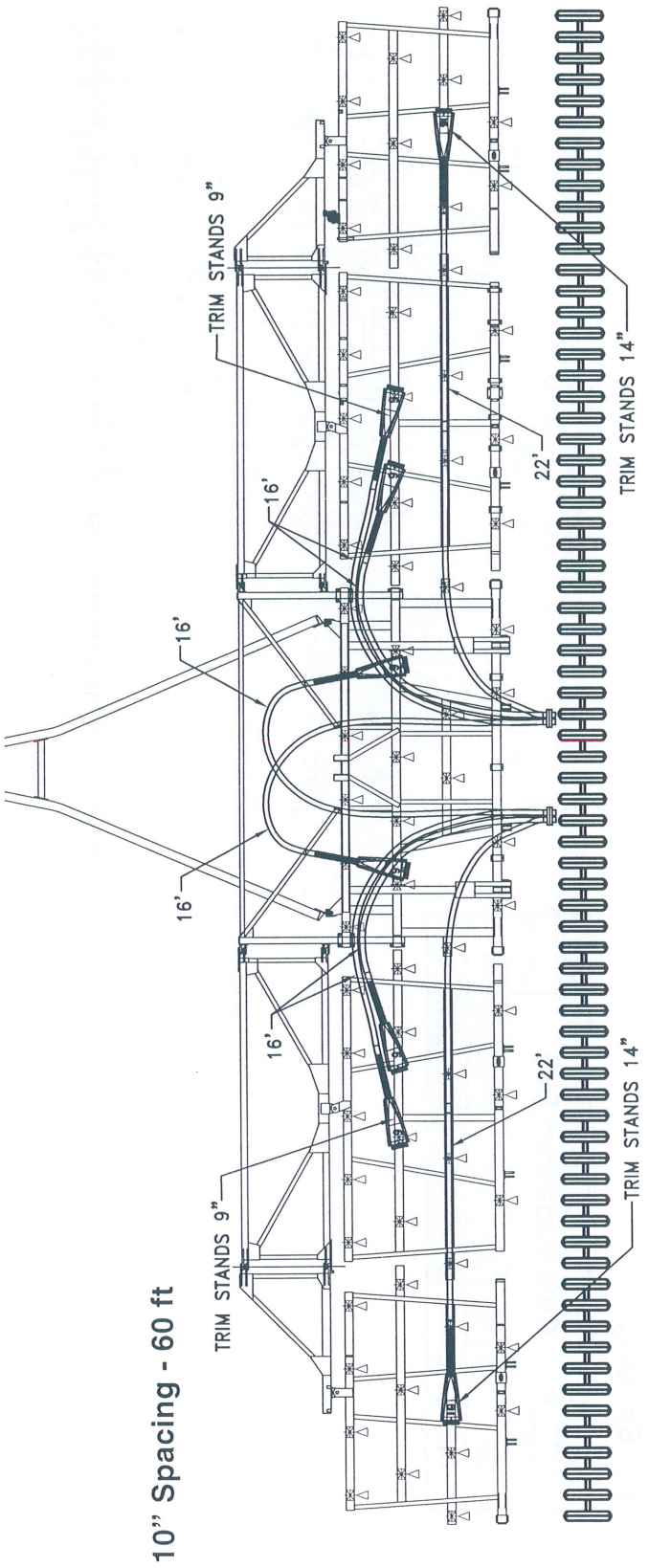

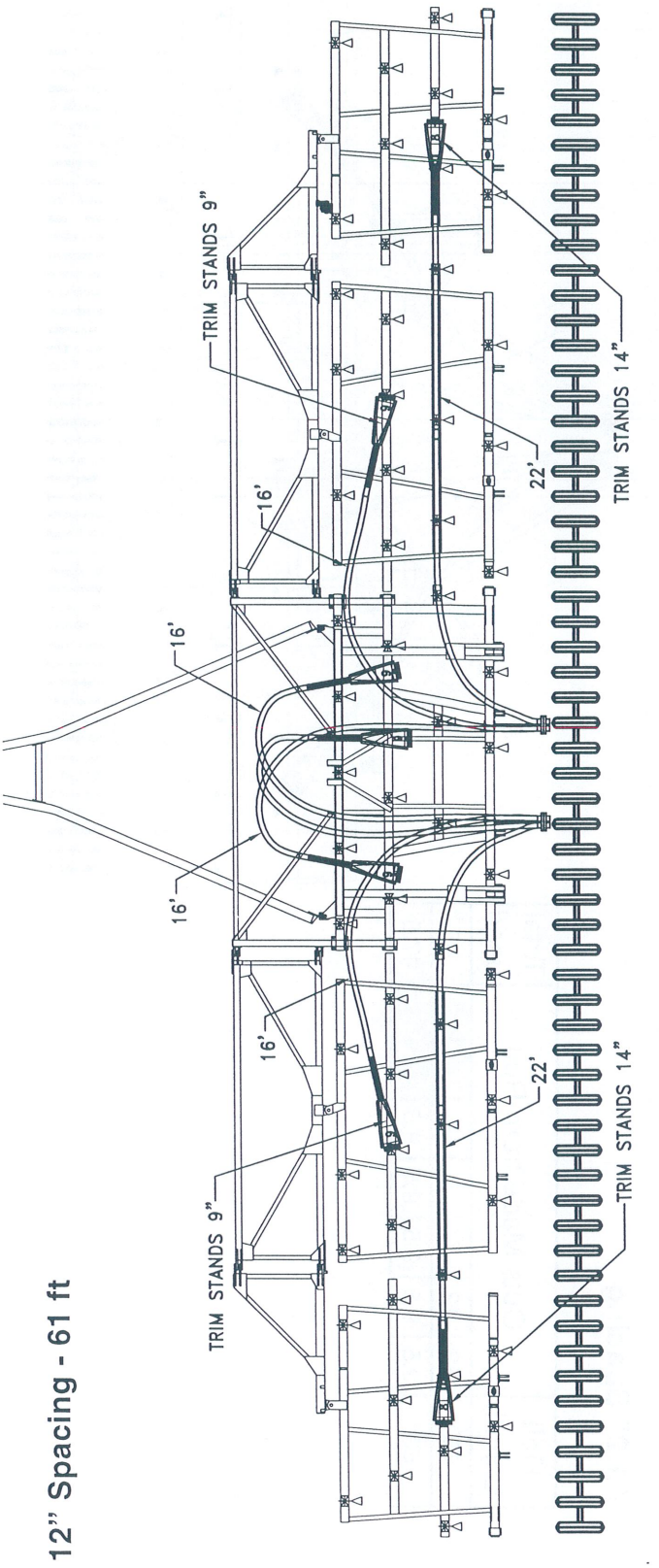

Head Locations

Air Seeder Tow Between - 29 ft

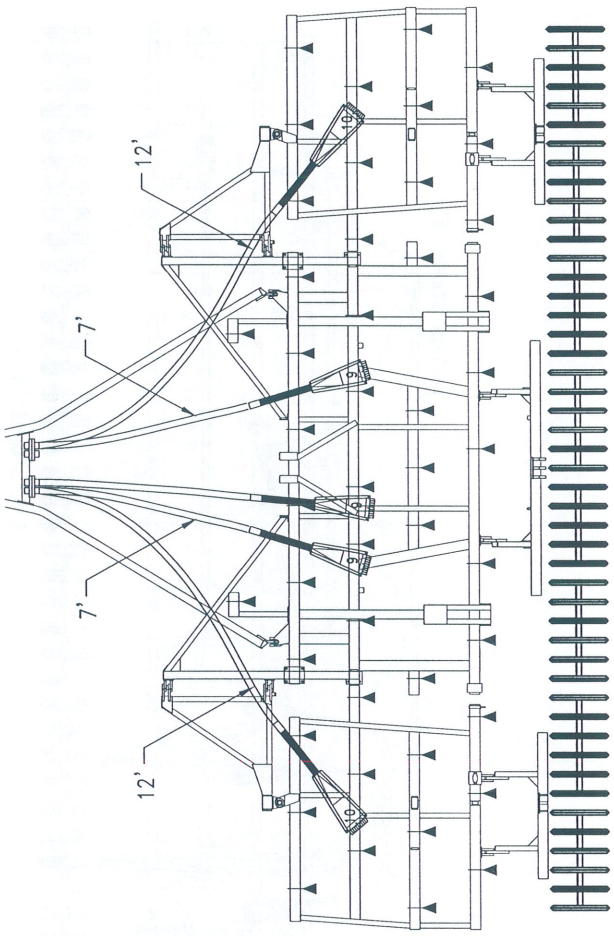

7 1/2" Spacing

Roll Length	Cuts Made from Roll							Total used
75	12	12	7	7	7			45
50	9.5	9.5	9.5	9.5	9.5			47.5

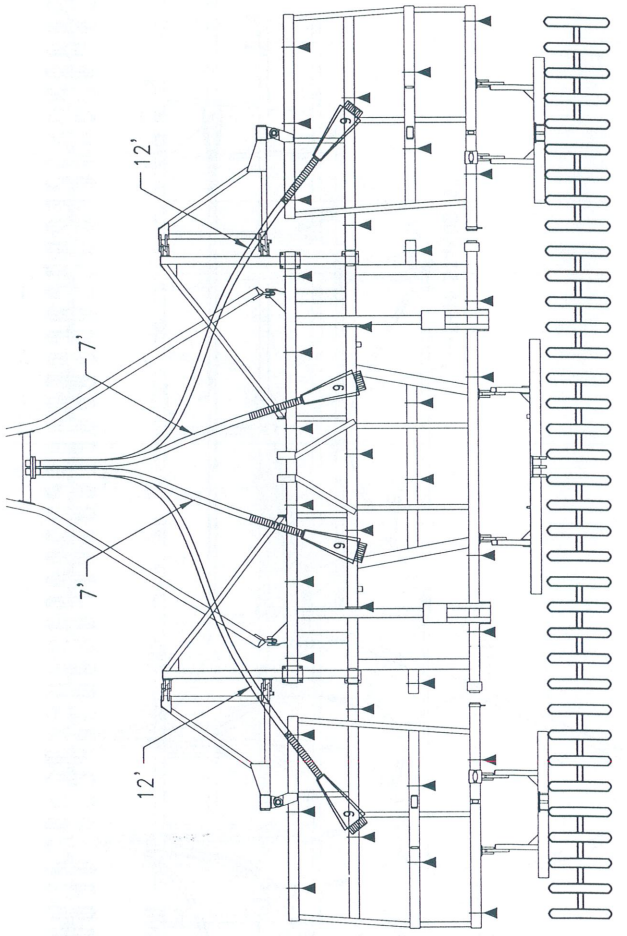

10" Spacing

Roll Length	Cuts Made from Roll							Total used
50	9.5	9.5	9.5	7	7			42.5
50	12	12						24

Air Seeder Tow Between - 29 ft

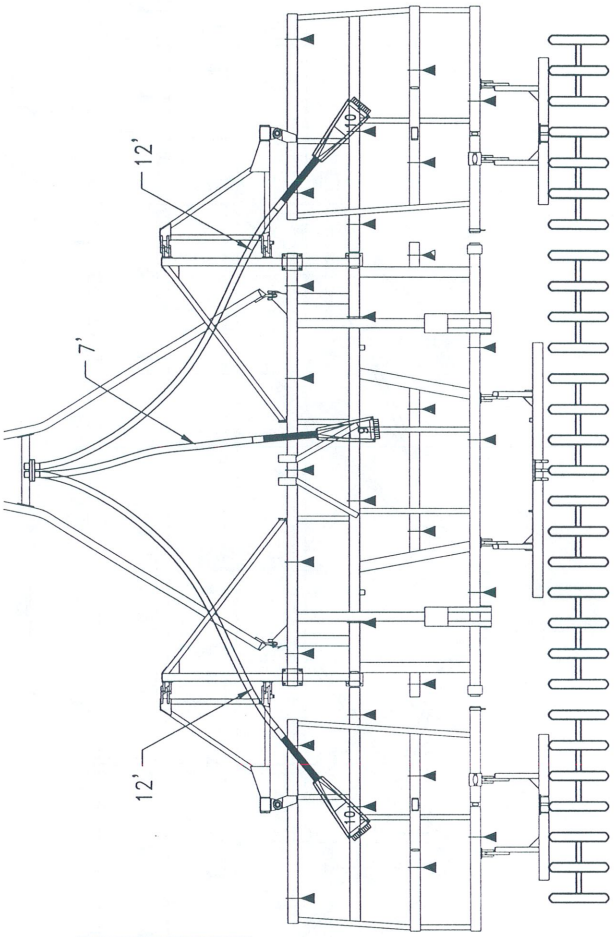

12" Spacing

Roll Length	Cuts Made from Roll							Total used
50	9.5	9.5	9.5	7				35.5
25	12	12						24

Head Locations

Air Seeder Tow Between - 34 ft

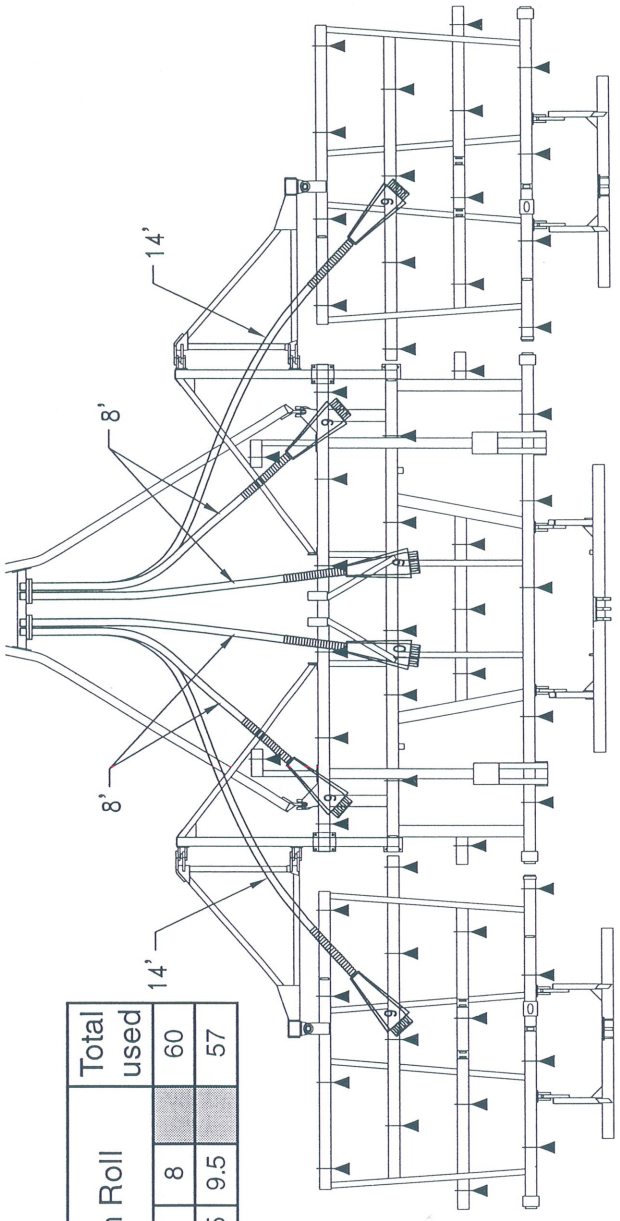

7 1/2" Spacing

Roll Length	Cuts Made from Roll							Total used
75	14	14	8	8	8	8		60
75	9.5	9.5	9.5	9.5	9.5	9.5		57

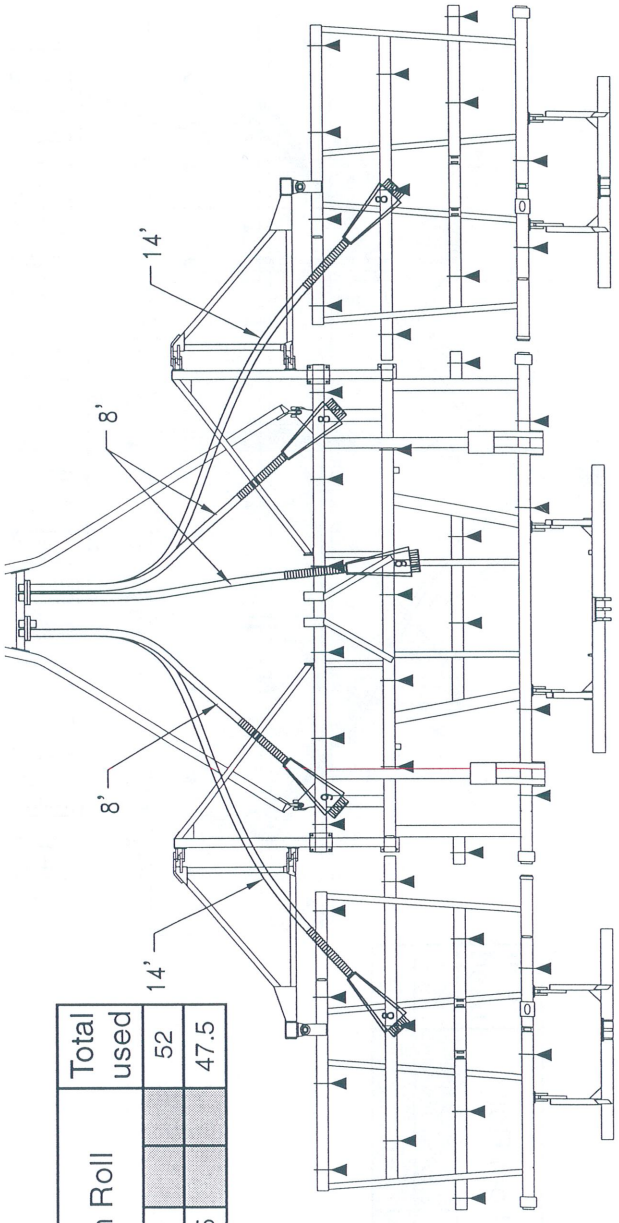

10" Spacing

Roll Length	Cuts Made from Roll							Total used
75	14	14	8	8	8			52
50	9.5	9.5	9.5	9.5	9.5			47.5

Head Locations

12" Spacing

Roll Length	Cuts Made from Roll							Total used
50	14	14	8	8				44
50	9.5	9.5	9.5	9.5	9.5			47.5

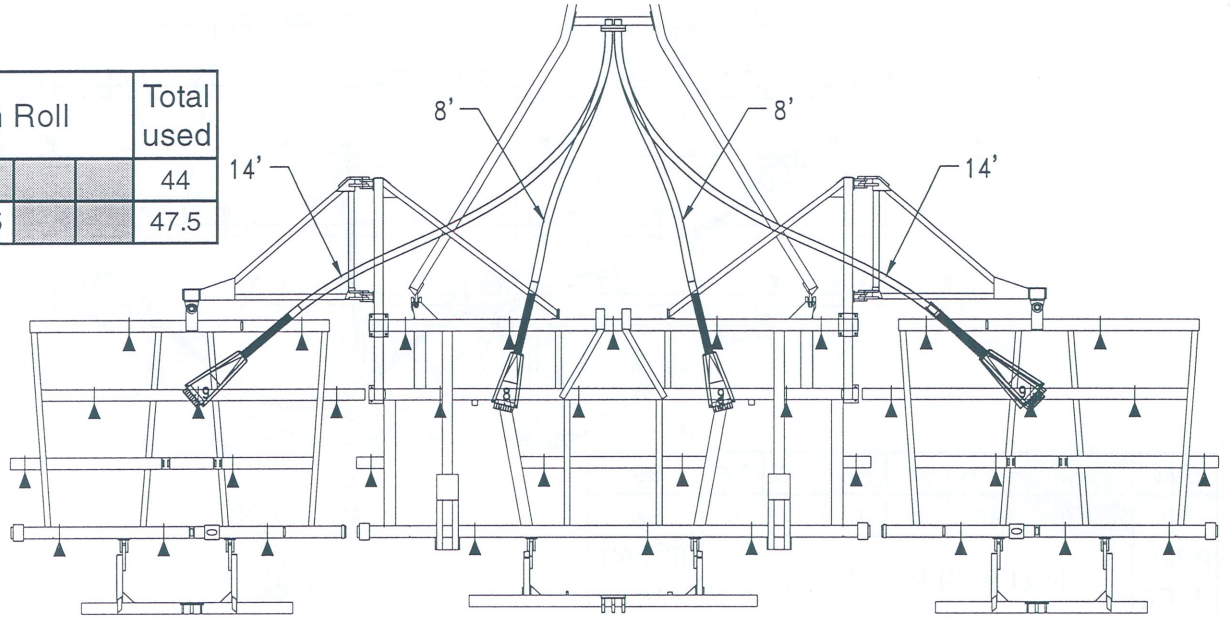

Note: Divider head stands mounted on <u>wings</u> must be cut 12" shorter for Double Shoot Openers

7 1/2" Spacing

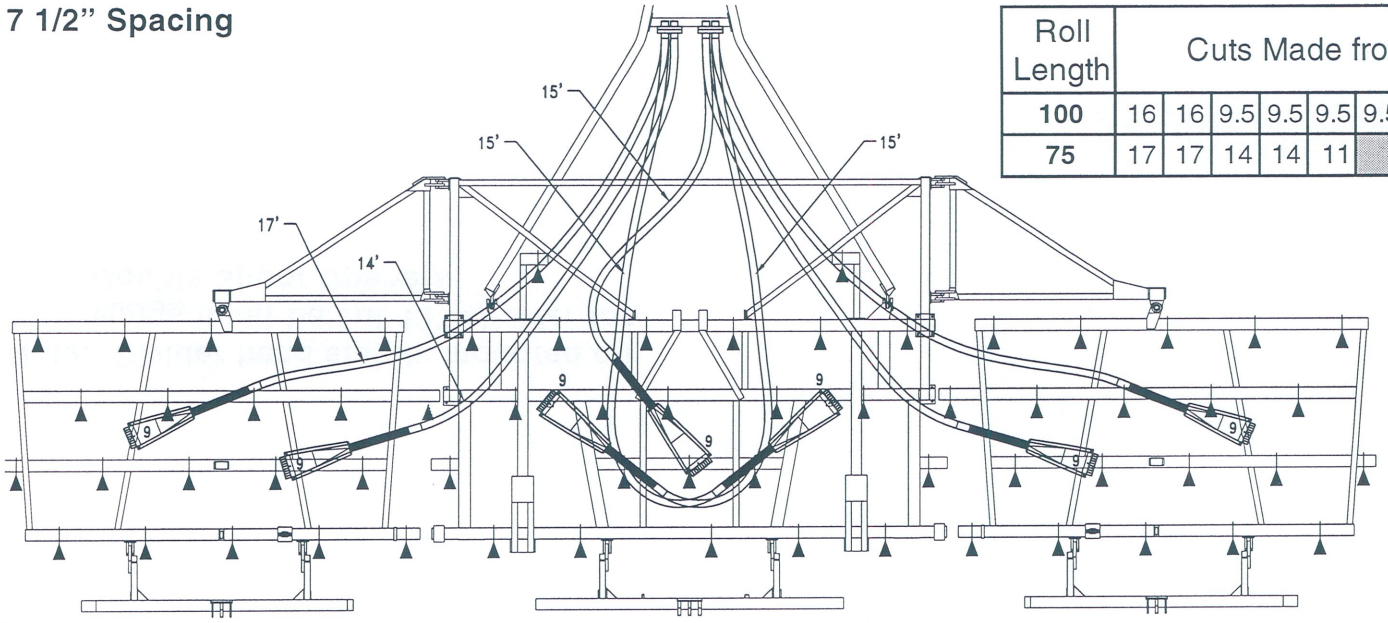

Roll Length	Cuts Made from Roll									Total used
100	16	16	9.5	9.5	9.5	9.5	9.5	9.5	9.5	98.5
75	17	17	14	14	11					73

Note: Divider head stands mounted on <u>wings</u> must be cut 12 1/2" shorter

10" Spacing

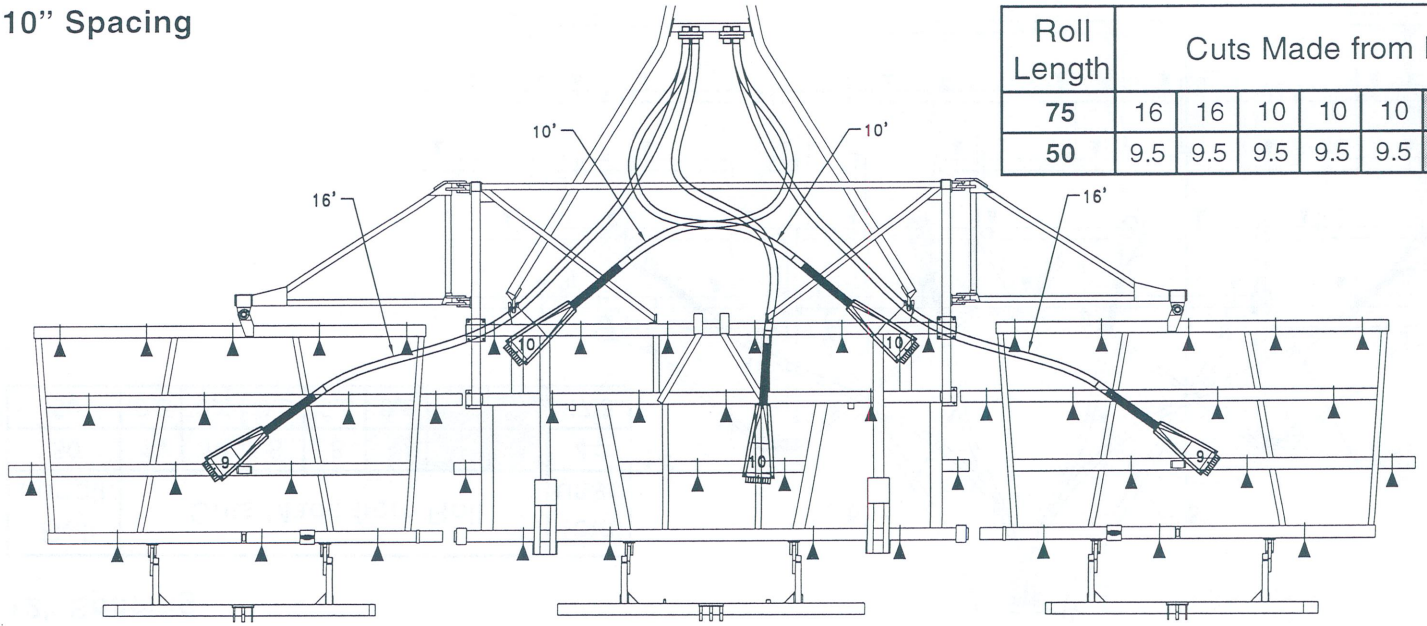

Roll Length	Cuts Made from Roll							Total used
75	16	16	10	10	10			62
50	9.5	9.5	9.5	9.5	9.5			47.5

Note: Divider head stands mounted on <u>wings</u> must be cut 12 1/2" shorter

Air Seeder Tow Between - 39 ft

Roll Length	Cuts Made from Roll						Total used
75	16	16	10	10	10		62
50	9.5	9.5	9.5	9.5	9.5		47.5

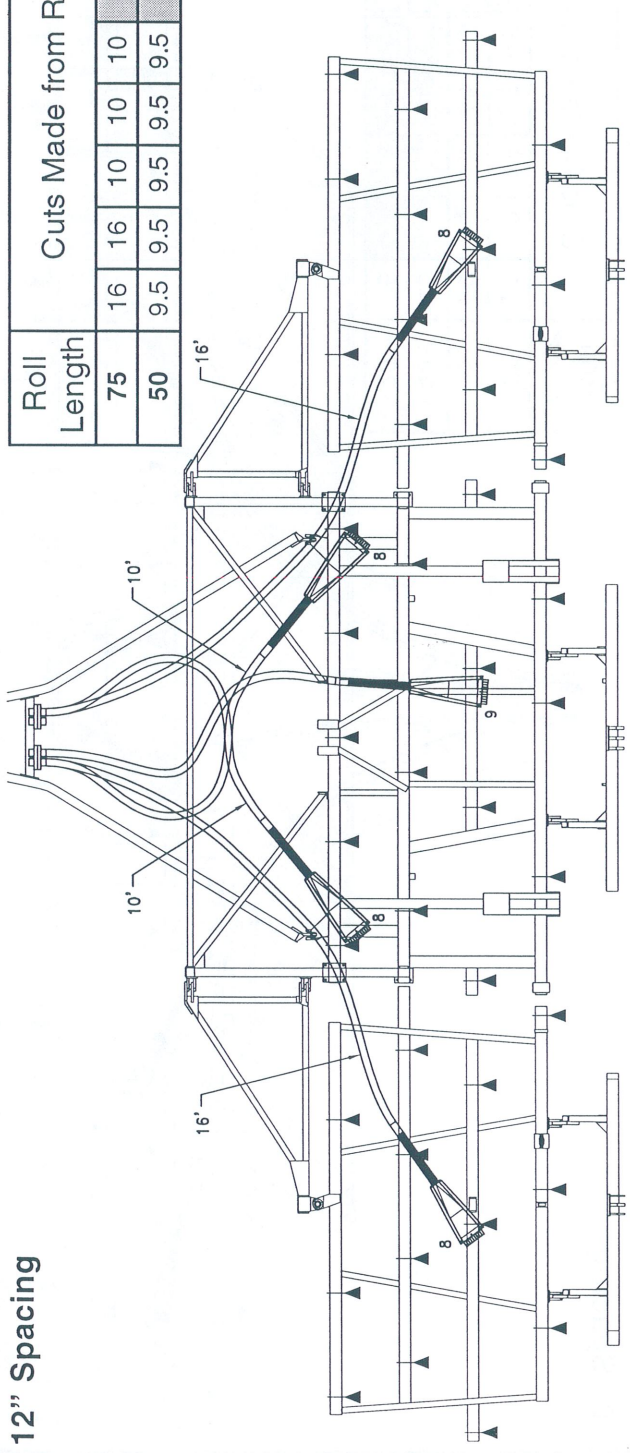

12" Spacing

Note: Divider head stands mounted on wings must be cut 12 1/2" shorter

Head Locations

Air Seeder Tow Between - 49 ft

7 1/2" Spacing

Roll Length	Cuts Made from Roll							Total used
100	20	20	18	9.5	9.5	9.5	9.5	96
100	20	20	18	9.5	9.5	9.5	9.5	96
25	24							24
25	24							24

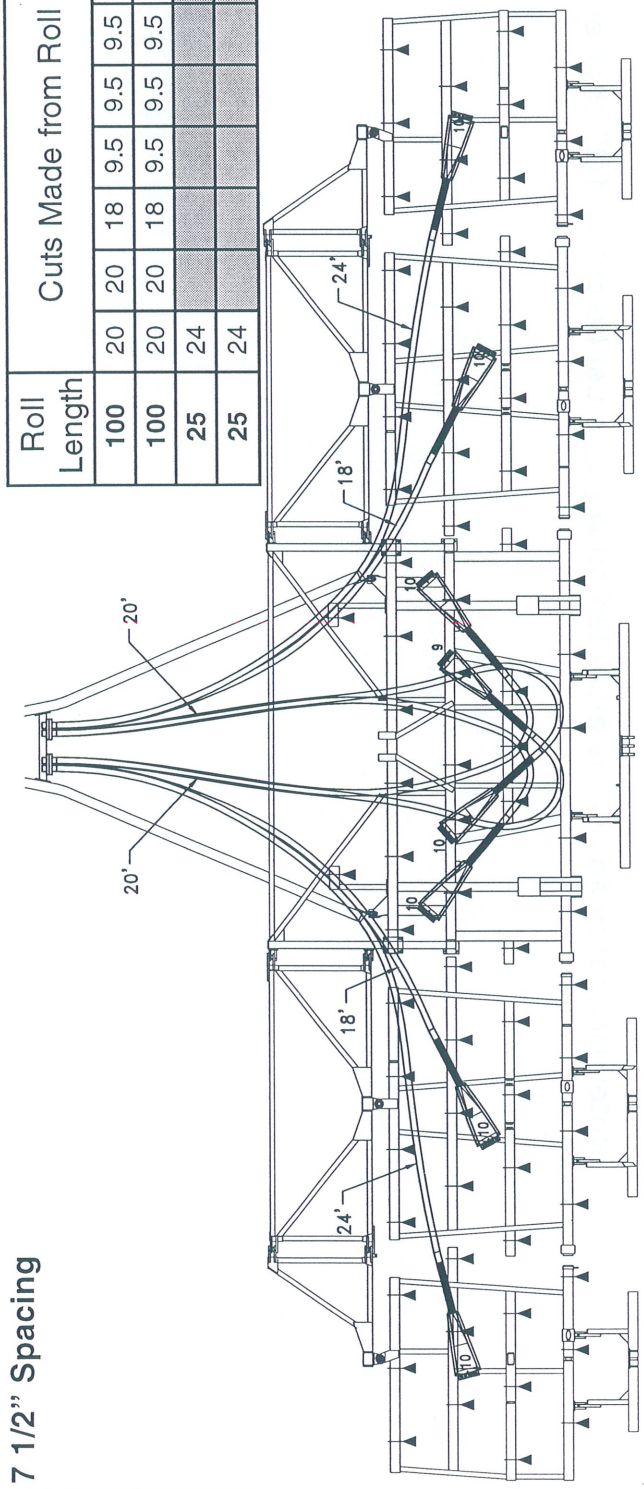

10" Spacing

Roll Length	Cuts Made from Roll							Total used
75	20	19	9.5	9.5	9.5			67.5
75	20	19	9.5	9.5	9.5			67.5
25	25							25
25	25							25

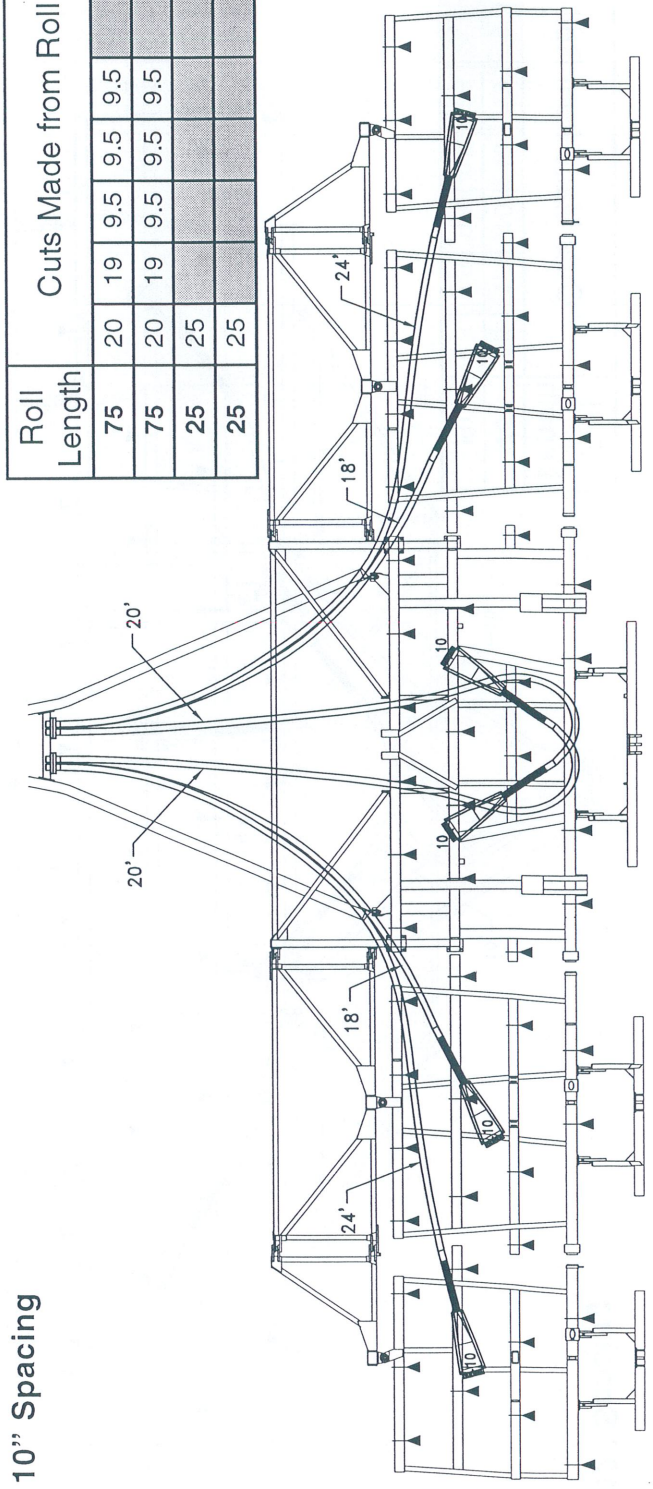

Air Seeder Tow Between - 49 ft

Roll Length	Cuts Made from Roll						Total used
75	20	19	9.5	9.5	9.5		67.5
75	20	19	9.5	9.5	9.5		67.5
25	25						25
25	25						25

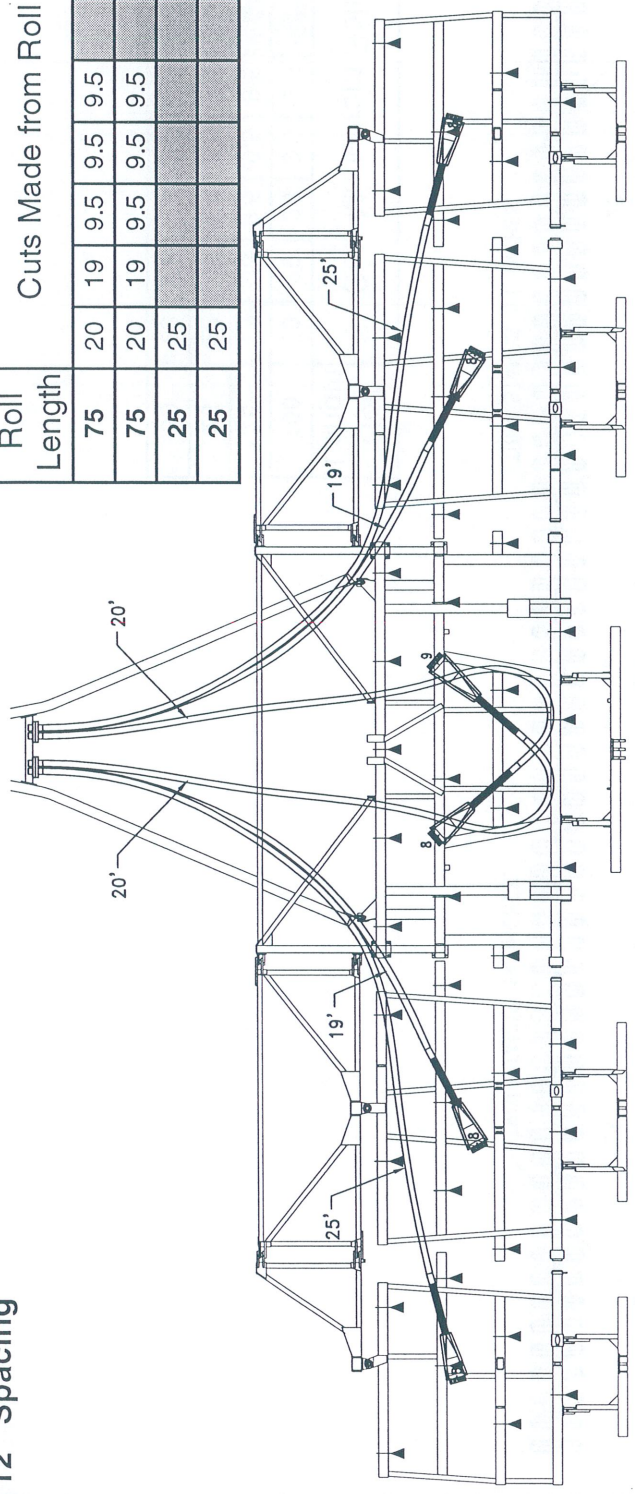

12" Spacing

Head Locations

Air Seeder Tow Between - 55 ft

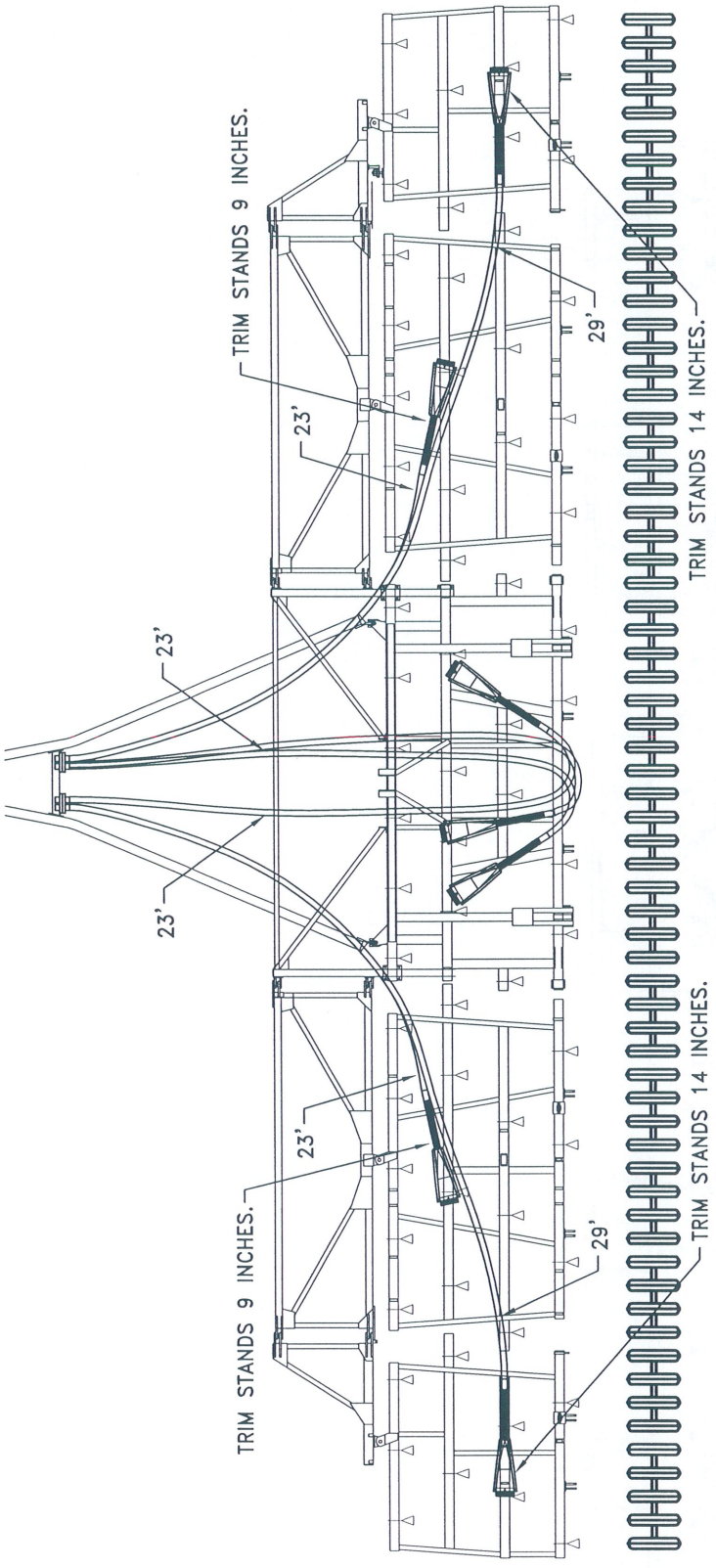

Roll Length	Cuts Made from Roll						Total used
100	29	29	23	9.5	9.5		100
75	23	23	9.5	9.5	9.5		74.5
25	23						23
50	23	9.5	9.5				42

10" Spacing

Air Seeder Tow Between - 55 ft

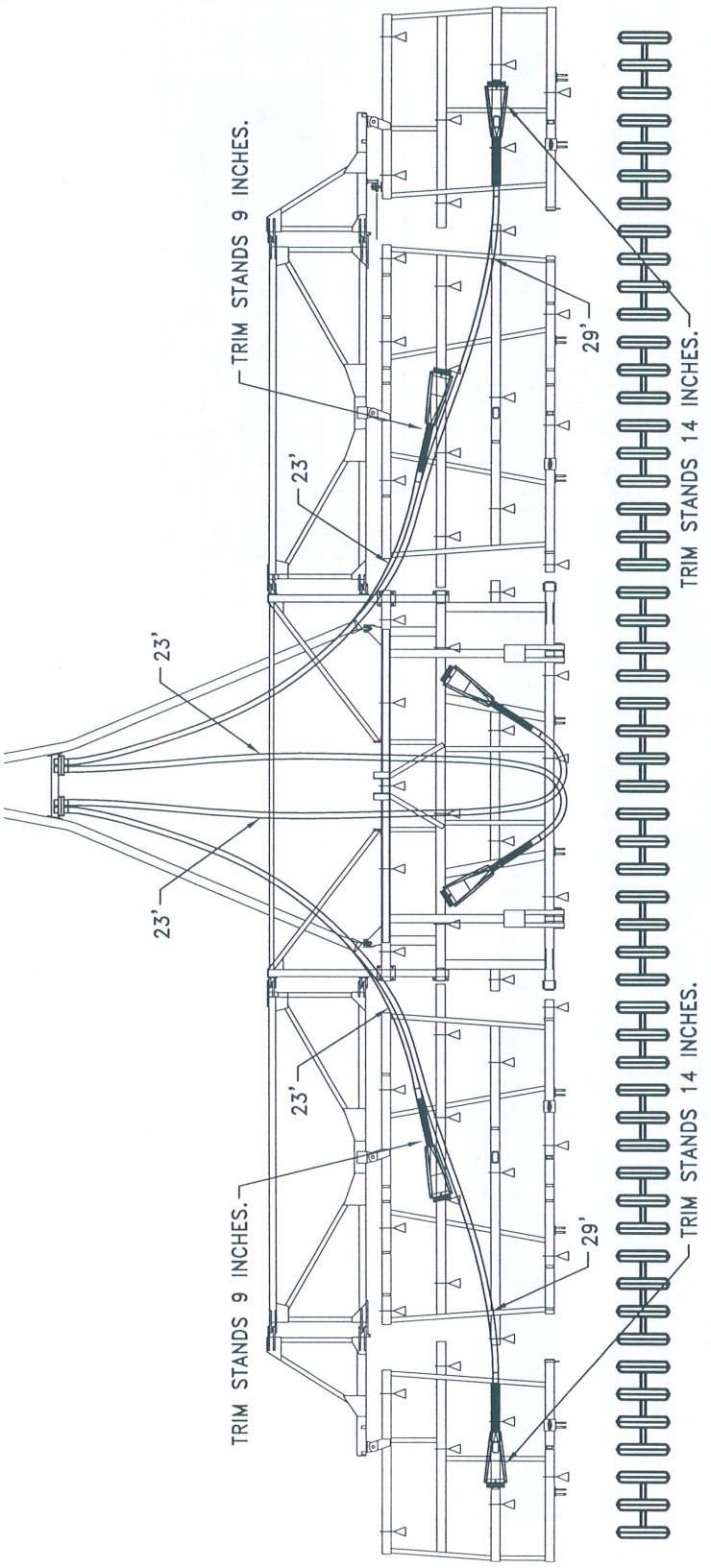

Roll Length	Cuts Made from Roll						Total used
75	29	23	23				75
75	29	9.5	9.5	9.5	9.5		67
25	23						23
50	23	9.5	9.5				42

12'' Spacing

Head Locations

Air Seeder Tow Between - 60 ft

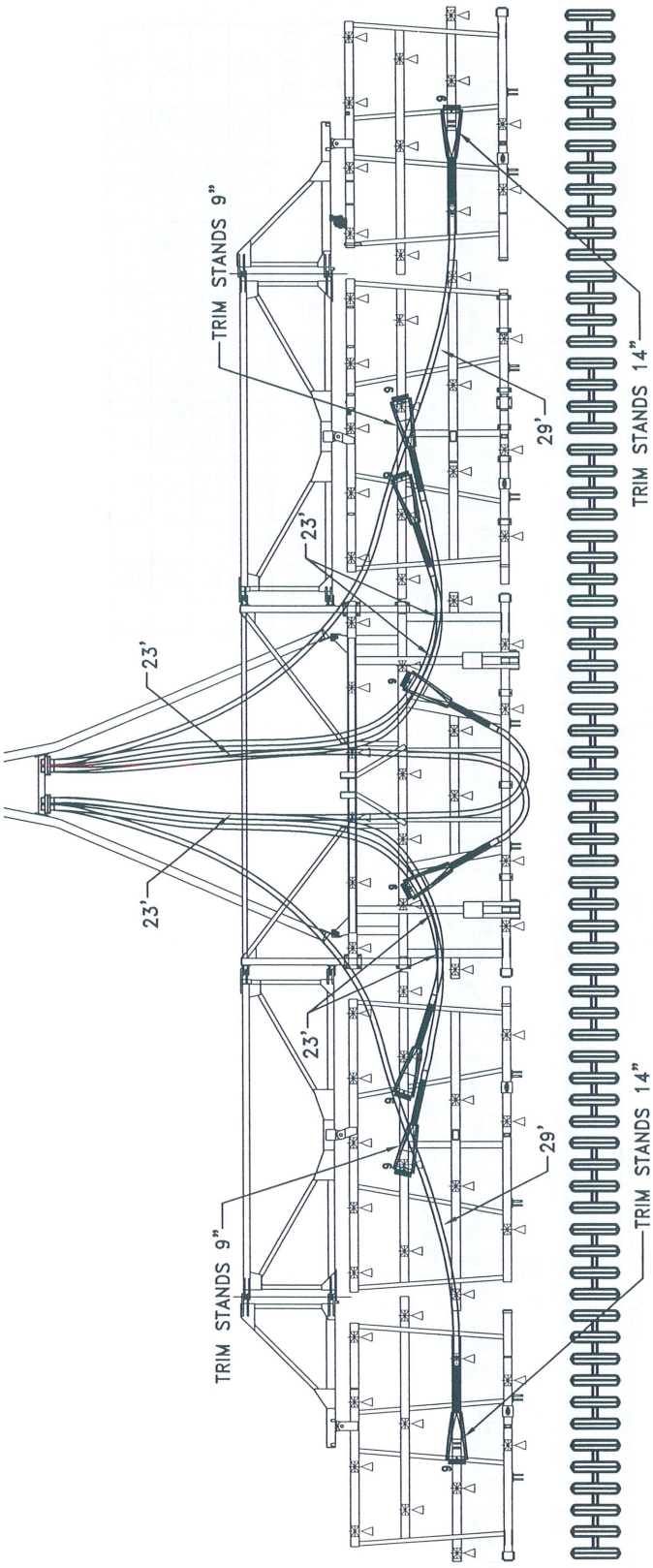

Roll Length	Cuts Made from Roll						Total used
100	29	29	23	9.5	9.5		100
100	23	23	23	9.5	9.5	9.5	97.5
25	23						23
75	23	9.5	9.5	9.5			51.5

10" Spacing - 60 ft

Air Seeder Tow Between - 60 ft

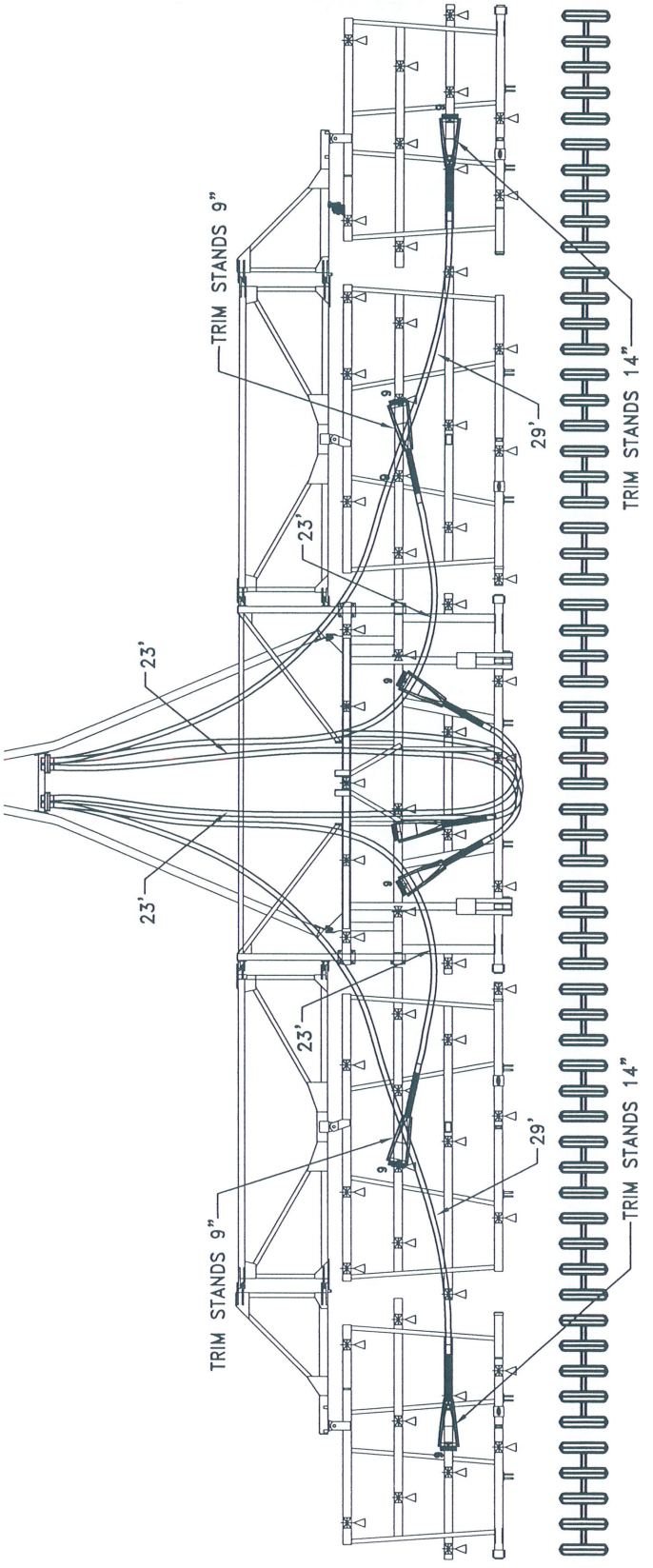

Roll Length	Cuts Made from Roll						Total used
100	29	29	23	9.5	9.5		100
75	23	23	23				69
25	23						23
50	9.5	9.5	9.5	9.5	9.5		47.5

12" Spacing - 61 ft

Notes